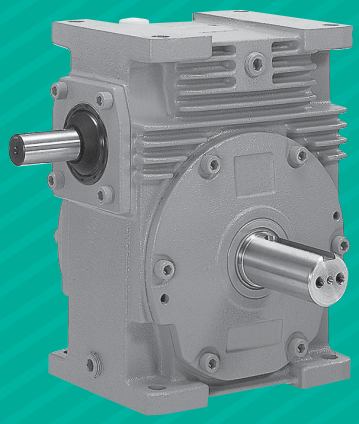

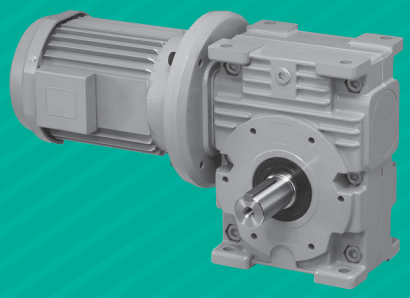

EWJ/EW/SWJ/SW Series

Single Reduction (Reduction ratio 1/10 to 1/60)

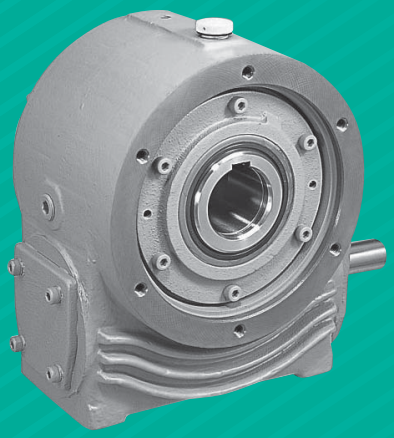

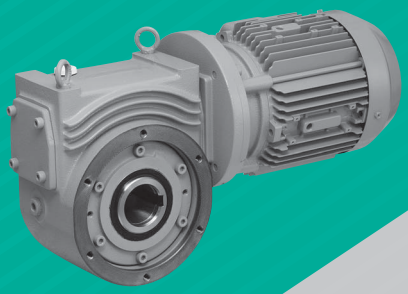

▶Model 23
▶Shaft Arrangement 24
▶Motor Options 25
▶Mounting Examples 26
▶Motor and Reduction Ratio Combinations 27
▶Sizing Chart ..... 28 - 30
▶Technical Data ..... 31 - 36
• Actual Reduction Ratio
• Allowable Loads on Shafts
• Starting Efficiency
• Moment of Inertia on Input Shaft
▶Structure ..... 37 - 40
▶Dimensional Drawings ..... 41 - 70

Model

	Series		Size	Installation direction	Reduction ratio	Shaft arrangement	Motor kW	Motor specifications		Option
EWJ EWJM EW EWM SWJ SWJM SW SWM Series	Single Reduction									
	Without motor	EWJ	25	E	10	L			-	T2
		SWJ	50	E	20	DF				
		EW	100	B	30	R				
		SW	100	B	40	LF				
	With motor	EWJM	42	E	30	LR	040	S		
		SWJM(R)	63	E	40	DF	075		-	H-K
		EWM(R)	100	T	25	H	370			
		SWM(R)	100	V	60	SRF	220	B	-	V
	With motor EWJMR EWMR SWJMR SWMR		EWJ/SWJ 25/35/42 50/63/70 EWJM(R) 42/50 63/70 SWJM 35/42/50 63/70 SWJMR 50/63/70 EW/SW 80/100 125/150 175/200 EWM(R)/ SWM(R) 80/100 125/150	EWJ25 to 42 EWJM42 SWJ25 to 70 SWJM35 to 70 E: E type EWJ50 to 70 EWJM50 to 70 E: E type V: V type EW/EWM SW/SWM 80 to 200 T: T type B: B type V: V type	10: 1/10 15: 1/15 20: 1/20 25: 1/25 30: 1/30 40: 1/40 50: 1/50 60: 1/60	Refer to page 24	(3-phase) 010: 0.1 kW 020: 0.2 kW 040: 0.4 kW 075: 0.75 kW 150: 1.5 kW 220: 2.2 kW 370: 3.7 kW 550: 5.5 kW	0.1 to 0.4 kW S: Standard motor mounted. SB: Standard motor with brake mounted. SX: Customer-supplied motor mounted. Y: Customer to mount motor 0.75 to 5.5 kW No code: IE3 motor without brake mounted. B: IE3 motor with brake mounted.		Reducer Refer to pages 229 to 241 Motor Refer to pages 242 to 243

Shaft Arrangement

EWJ/EW Series

Arrows in figures indicate direction of rotation.

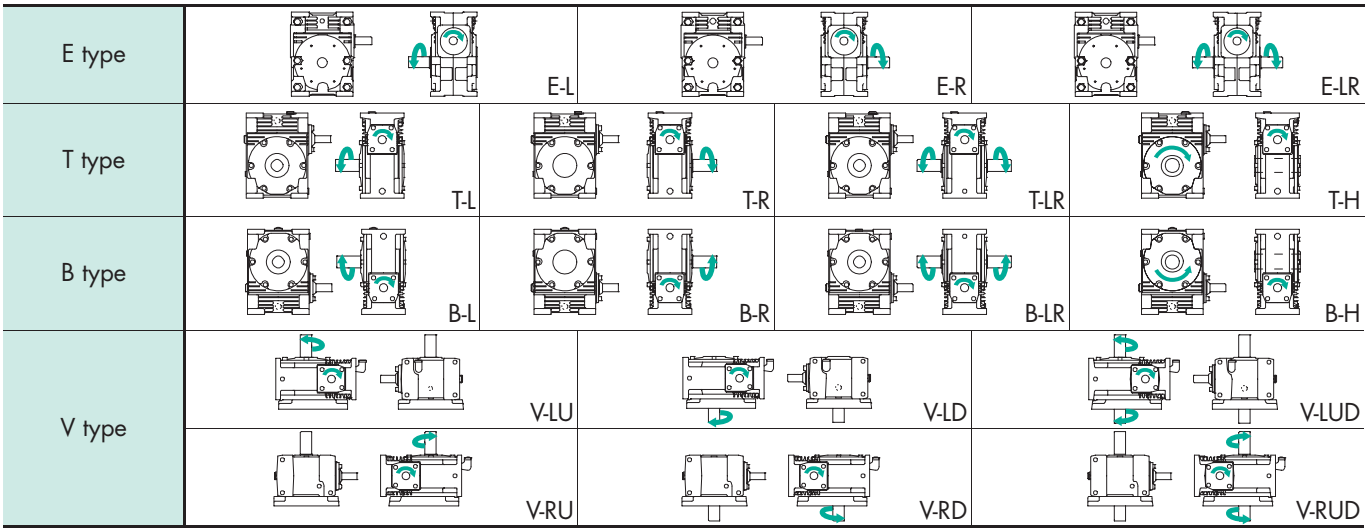

Note 1) E type applies to the EWJ series. 2) The hollow output shaft type (-H) applies to the EW series.
3) Keyway positions do not match one another on double output shafts. Please contact Tsubaki representative when required.

EWJM(R)/EWM(R) Series

Arrows in figures indicate direction of rotation.

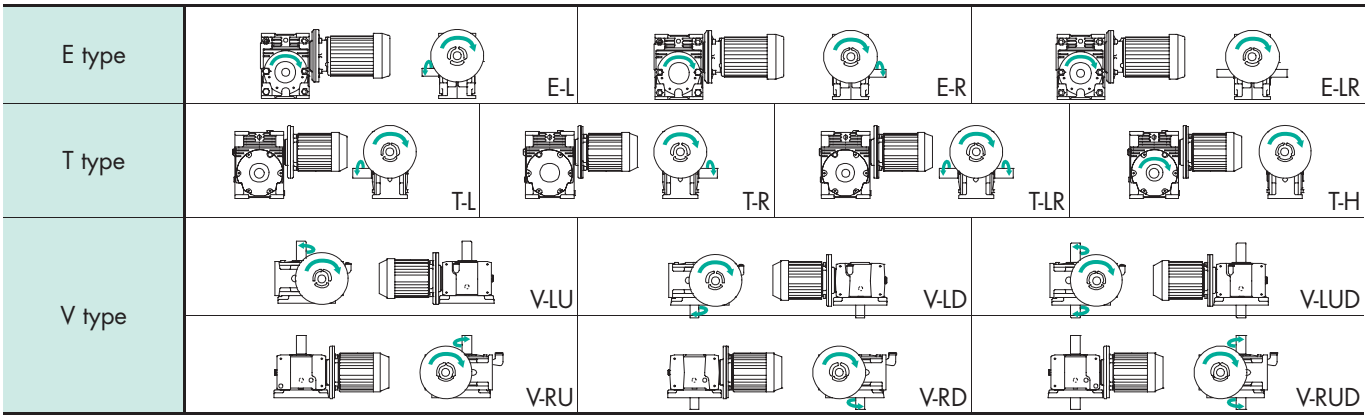

Note 1) E type applies to the EWJM(R) series. 2) The hollow output shaft type (-H) applies to the EWM(R) series.
3) Keyway positions do not match one another on double output shafts. Please contact Tsubaki representative when required.

SWJ/SW/SWJM(R)/SWM(R) Series

Arrows in figures indicate direction of rotation.

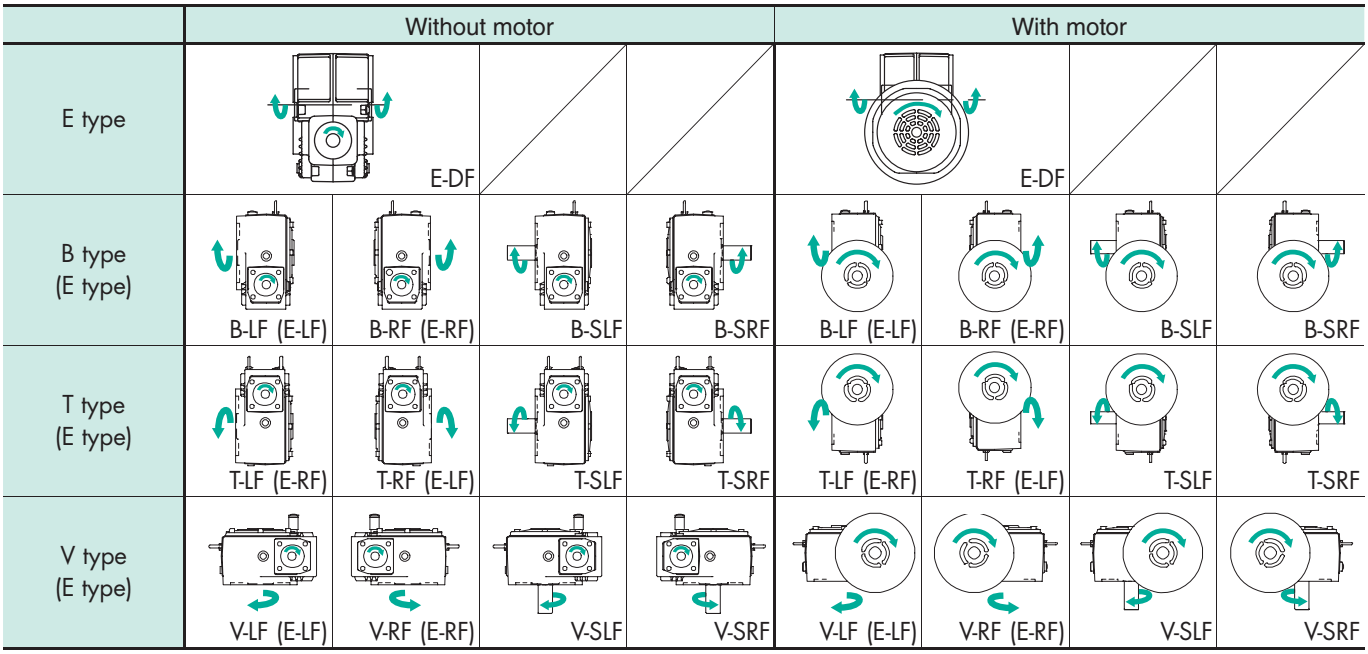

Note 1) The solid output shaft type (-SLF, -SRF) applies to the SW/SWM series. 2) The shaft arrangement for SWJ25 to 63 and SWJM35 to 63 is E–DF. 3) Keyway positions do not match one another on double output shafts. Please contact Tsubaki representative when required.

Models

Series		EWJ	SWJ	EW	SW	EW	SW	EWJ/EW	SW	Reducer options	EWJ/SWJ	EW/SW	SWJ/SW	SWJ/SW
Installation direction		E		T		B		V			E	T, B, V	E, T, B, V	E, T, B, V
Shaft arrangement	Solid output shaft	L R LR	—	L R LR	SLF SRF	L R LR	SLF SRF	LU LD LUD RU RD RUD	SLF SRF		Double input shaft: T2	Double input shaft: Refer to page 232 for information on symbols.	—	—
	Hollow output shaft	—	DF LF RF	H	LF RF	H	LF RF	—	LF RF				Power-Lock specification: K	Taper bush specification: TB
Without motor	EWJ/SWJ25	○	○	—	—	—	—	—	—		○	—	—	—
	EWJ/SWJ35	○	○	—	—	—	—	—	—		○	—	—	—
	EWJ/SWJ42	○	○	—	—	—	—	—	—		○	—	—	—
	EWJ/SWJ50	○	○	—	—	—	—	○	—		△	—	□	—
	EWJ/SWJ63	○	○	—	—	—	—	○	—		△	—	□	—
	EWJ/SWJ70	○	○	—	—	—	—	○	—		△	—	□	△
	EW/SW80	—	—	○	○	○	○	○	○		—	□	□	△
	EW/SW100	—	—	○	○	○	○	○	○		—	□	□	△
	EW/SW125	—	—	○	○	○	○	○	○		—	□	□	△
	EW/SW150	—	—	○	○	○	○	○	○		—	□	□	△
	EW/SW175	—	—	○	○	○	○	○	○		—	□	□	—
	EW/SW200	—	—	○	○	○	○	○	○		—	□	□	—
With motor	SWJM35	○	○	—	—	—	—	—	—		○	—	—	—
	EWJM(R)/SWJM42	○	○	—	—	—	—	—	—		○	—	—	—
	EWJM(R)/SWJM(R)50	○	○	—	—	—	—	○	—		△	—	□	—
	EWJM(R)/SWJM(R)63	○	○	—	—	—	—	○	—		△	—	□	—
	EWJM(R)/SWJM(R)70	○	○	—	—	—	—	○	—		△	—	□	△
	EWM(R)/SWM(R)80	—	—	○	○	○	○	○	○		—	□	□	△
	EWM(R)/SWM(R)100	—	—	○	○	○	○	○	○		—	□	□	△
	EWM(R)/SWM(R)125	—	—	○	○	○	○	○	○		—	□	□	△
	EWM(R)/SWM(R)150	—	—	○	○	○	○	○	○		—	□	□	△
	EWM(R)/SWM(R)175	—	—	□	□	□	□	□	□		—	□	□	—
	EWM(R)/SWM(R)200	—	—	□	□	□	□	□	□		—	□	□	—

○: Standard product △: Option □: Made to order.

Motor Options

Motor option	Description
Z	Inverter ready motors (0.4 kW or less)
W	Outdoor specification
V	400 V class [3]
V1	380 V, 50 Hz (0.4 kW or less, 3.7 kW, 5.5 kW)
V2	380 V, 60 Hz (0.4 kW or less)
V3	415 V, 50 Hz (0.4 kW or less)
V4	460 V, 60 Hz (0.4 kW or less)
N	200 V class CE compliant
N2	200 V class UL compliant
N3	200 V class CCC compliant
VN	400 V class CE compliant
VN2	400 V class UL compliant
VN3	400 V class CCC compliant
H	Hard terminal box (0.4 kW or less)
Q	Manual quick-release brake
M	Manual shaft (motor fan cover side) (2.2 kW or less)

(Without brake)

Z	ZW	ZWV	V	VN
	ZV	ZVH		VN2
	ZH			VN3
W	WV			VH
	WV1		V1	V1H
	WV2		V2	V2H
	WV3		V3	V3H
	WV4		V4	V4H
	WN	WVN	N	
	WN3	WVN3	N2	
			N3	
			H	

(With brake)

Z	ZV	ZVH		V1	V1H
		ZVQ		V2	V2H
		ZVM		V3	V3H
	ZH	ZHQ		V4	V4H
		ZHM	N		
	ZQ	ZQM	N2		
	ZM		N3		
V	VN		H	HQ	HQM
	VN3			HM	
	VH	VHQ	Q	QM	
		VHM	M		
	VQ	VQM			
	VM				

Note 1) Shaded options are for 0.2 kW and 0.4 kW motors.
2) 0.75 kW or larger brake motors for outdoor use are made to order.
Contact Tsubaki reperesentatives for details.
3) 400 V class voltage frequency

0.1 to 0.4 kW	400/400/440 V	50/60/60 Hz
0.75 to 2.2 kW	380/400/400/440 V	50/50/60/60 Hz
3.7 to 5.5 kW without brake	380/400/400/440 V	50/60/60/60 Hz
with brake	380/400/400/440 V	50/50/60/60 Hz

Mounting Examples

EW/EWM(R) Series

- Pressure vent and oil gauge positions will change when mounting EW sizes 80-200 on walls or ceilings. Make sure to specify the mounting method when ordering.
- The EWJ/EWJM(R) series may be mounted on any side.

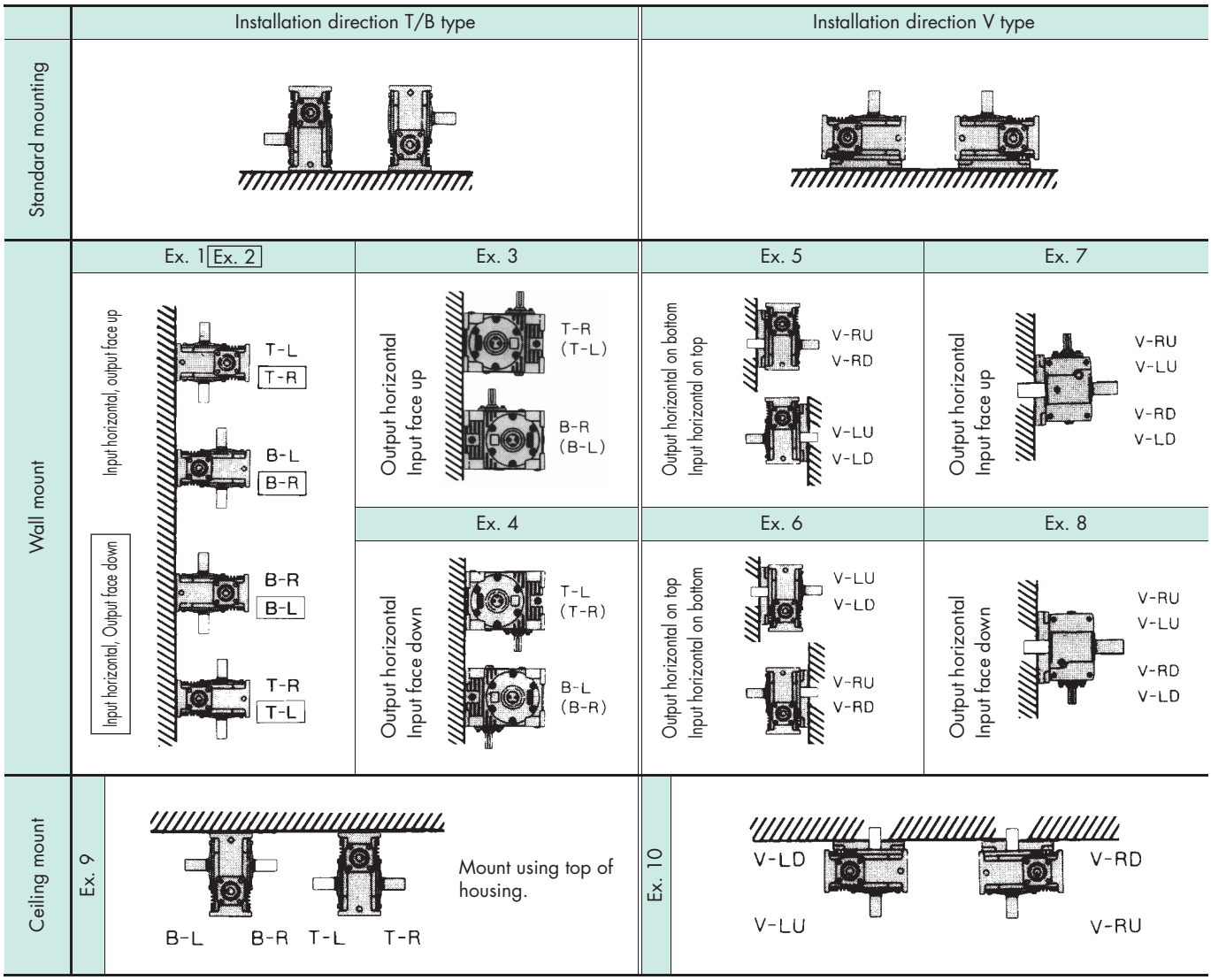

SW/SWM(R) Series

- Pressure vent and oil gauge positions will change depending on the mounting method of SW sizes 80 to 200. Make sure to specify the mounting method when ordering.
- The SWJ/SWJM(R) series may be mounted on any side.

Motor and Reduction Ratio Combinations

- Output torque values are for motor speeds of 1450 r/min, 1750 r/min (50/60 Hz).
- Motor/reducer combinations shown are standard.
- Shaded boxes indicate the motor capacity exceeds the input kW of the reducer. Confirm output torque before using. (Thermal rating factor is 1.0)
- Torque values may be lower if the ambient temperature is cold. Contact Tsubaki representative for further details.
- Refer to pages 17 to 18 for sizing.

EWJM(R)/EWM(R) Series

Efficiency class	With standard motor (IE1)						With motor (IE3)														
	0.2 kW			0.4 kW			0.75 kW			1.5 kW			2.2 kW			3.7 kW			5.5 kW		
	Size	Output torque 50 Hz N·m {kgf·m}	Output torque 60 Hz N·m {kgf·m}	Size	Output torque 50 Hz N·m {kgf·m}	Output torque 60 Hz N·m {kgf·m}	Size	Output torque 50 Hz N·m {kgf·m}	Output torque 60 Hz N·m {kgf·m}	Size	Output torque 50 Hz N·m {kgf·m}	Output torque 60 Hz N·m {kgf·m}	Size	Output torque 50 Hz N·m {kgf·m}	Output torque 60 Hz N·m {kgf·m}	Size	Output torque 50 Hz N·m {kgf·m}	Output torque 60 Hz N·m {kgf·m}	Size	Output torque 50 Hz N·m {kgf·m}	Output torque 60 Hz N·m {kgf·m}
10	Select from the Croise motor series. Refer to page 194						50	44.0 {4.5}	37.0 {3.8}	63	90 {9.1}	75 {7.6}	70	132 {13.5}	110 {11.2}	80	224 {22.8}	187 {19.1}	100	337 {34.3}	281 {28.6}
15				42	32.2 {3.3}	27.0 {2.8}	50	64.0 {6.5}	53.0 {5.5}	63	129 {13.2}	108 {11.0}	70	191 {19.4}	160 {16.3}	80	325 {33.1}	272 {27.7}	100	491 {50.1}	410 {41.8}
20				42	40.8 {4.2}	34.4 {3.5}	50	83.0 {8.4}	69.0 {7.1}	63	167 {17.0}	140 {14.3}	70	247 {25.2}	207 {21.1}	80	412 {42.0}	353 {36.0}	100	637 {65.0}	533 {54.4}
25				42	49.2 {5.0}	41.5 {4.2}	50	100 {10.2}	84.0 {8.6}	63	196 {20.0}	171 {17.4}	80	305 {31.2}	256 {26.2}	100	525 {53.6}	440 {44.9}	125	791 {80.7}	662 {67.6}
30				42	51.1 {5.2}	47.3 {4.8}	50	103 {10.5}	95 {9.7}	63	198 {20.2}	180 {18.4}	80	350 {35.7}	295 {30.1}	100	607 {61.9}	510 {52.1}	125	916 {93.5}	770 {78.5}
40	42	34.1 {3.5}	29.0 {3.0}	50	76 {7.8}	65.0 {6.6}	63	145 {14.8}	123 {12.6}	80	302 {30.8}	256 {26.1}	100	457 {46.7}	386 {39.4}	125	792 {80.8}	667 {68.0}	150	1193 {122}	1003 {102}
50	42	40.0 {4.1}	34.2 {3.5}	50	90 {9.2}	76 {7.8}	63	174 {17.7}	147 {15.0}	80	362 {36.9}	307 {31.3}	100	552 {56.3}	467 {47.6}	125	949 {96.8}	802 {81.8}	150	1453 {148}	1225 {125}
60	42	45.2 {4.6}	38.8 {4.0}	50	92 {9.4}	86 {8.8}	63	177 {18.1}	163 {16.7}	80	376 {38.4}	342 {34.9}	100	628 {64.1}	543 {55.4}	125	1017 {104}	931 {95.0}	150	1561 {159}	1401 {143}

SWJM(R)/SWM(R) Series

Efficiency class	With standard motor (IE1)						With motor (IE3)														
	0.2 kW			0.4 kW			0.75 kW			1.5 kW			2.2 kW			3.7 kW			5.5 kW		
	Size	Output torque 50 Hz N·m {kgf·m}	Output torque 60 Hz N·m {kgf·m}	Size	Output torque 50 Hz N·m {kgf·m}	Output torque 60 Hz N·m {kgf·m}	Size	Output torque 50 Hz N·m {kgf·m}	Output torque 60 Hz N·m {kgf·m}	Size	Output torque 50 Hz N·m {kgf·m}	Output torque 60 Hz N·m {kgf·m}	Size	Output torque 50 Hz N·m {kgf·m}	Output torque 60 Hz N·m {kgf·m}	Size	Output torque 50 Hz N·m {kgf·m}	Output torque 60 Hz N·m {kgf·m}	Size	Output torque 50 Hz N·m {kgf·m}	Output torque 60 Hz N·m {kgf·m}
10	35	11.2 {1.1}	9.3 {1.0}	42	22.5 {2.3}	18.8 {1.9}	50	44 {4.5}	37 {3.8}	63	90.0 {9.1}	75 {7.6}	70	132 {13.5}	110 {11.2}	80	224 {22.8}	187 {19.1}	100	337 {34.4}	281 {28.6}
15	35	15.9 {1.6}	13.4 {1.4}	42	32.2 {3.3}	27.0 {2.8}	50	64 {6.5}	53 {5.5}	63	129 {13.2}	108 {11.0}	*80	210 {21.4}	250 {25.5}	80	325 {33.1}	272 {27.7}	100	491 {50.1}	410 {41.8}
20	35	20.1 {2.1}	16.9 {1.7}	42	40.8 {4.2}	34.4 {3.5}	63	83 {8.5}	70 {7.1}	70	168 {17.2}	141 {14.4}	80	250 {25.5}	210 {21.4}	80	412 {42.0}	353 {36.0}	100	637 {65.0}	533 {54.4}
25	35	24.2 {2.5}	20.4 {2.1}	42	49.2 {5.0}	41.5 {4.2}	63	102 {10.4}	85 {8.7}	70	205 {20.8}	172 {17.6}	80	305 {31.2}	256 {26.2}	100	525 {53.6}	440 {44.9}	125	791 {80.7}	662 {67.6}
30	42	28.0 {2.9}	23.7 {2.4}	50	60 {6.6}	51 {5.2}	63	115 {11.8}	98 {9.9}	*80	184 {18.8}	165 {16.8}	80	350 {35.7}	295 {30.1}	100	607 {61.9}	510 {52.1}	125	916 {93.5}	770 {78.5}
40	42	34.1 {3.5}	29.0 {3.0}	50	76 {7.8}	65 {6.6}	63	145 {14.8}	123 {12.6}	80	302 {30.8}	256 {26.1}	100	457 {46.7}	386 {39.4}	125	792 {80.8}	667 {68.0}	150	1193 {122}	1003 {102}
50	42	40.0 {4.1}	39.2 {3.5}	50	86 {8.8}	76 {7.8}	63	168 {17.1}	147 {15.0}	80	362 {36.9}	307 {31.3}	100	552 {56.3}	467 {47.6}	125	949 {96.8}	802 {81.8}	150	1453 {145}	1225 {125}
60	42	45.2 {4.6}	38.8 {4.0}	50	86 {8.7}	80 {8.2}	70	171 {17.5}	15.8 {16.2}	80	376 {38.4}	342 {34.9}	100	628 {64.1}	543 {55.4}	125	1017 {104}	931 {95.0}	150	1561 {159}	1401 {143}

* Non-standard combination, contact Tsubaki representative.

Sizing Chart (Sizing Table 1)

Common for EWJ/EW/SWJ/SW Series

Input r/min	Reduction ratio	Motor kW 0.2 EWJ	0.2 SWJ	0.4 EWJ	0.4 SWJ	0.75 EWJ	0.75 SWJ	1.5 EWJ EW	1.5 SWJ SW	2.2 EWJ EW	2.2 SWJ SW	3.7 EWJ EW	3.7 SW	5.5 EW	5.5 SW	7.5 EW	7.5 SW	11 EW	11 SW	15 EW	15 SW	18.5 EW	18.5 SW	22 EW	22 SW	30 EW	30 SW
1750	10	35		35		50		50		63		70	80	80		80		100		125		125		125		150	
	15	35		42		50		50	63	63	70	80		80		100		125		125		150		150		175	
	20	35		42		50		63		70		80		100		100		125		150		150		175		200	
	25	35		42		50		63	70	80		80		100		125		150		150		175		200			
	30	35		50		50	63	63	70	80		100		100		125		150		175		175		200			
	40	35		50		63		70	80	80		100		125		150		175		200		200					
	50	42		50		63		80		80		125		125		150		175		200							
	60	42		50		63		80		100		125		150		175		200		125							
1450	10	35		35		50		50		63		70	80	80		80		100									
	15	35		42		50		63		70		80		80		100		125		125		125		150		150	
	20	35		42		50		63		80		80		100		125		125		150		150		150		175	
	25	35		50		50		63	70	80		80		100		125		150		175		175		175		200	
	30	35		50		50		63	80	80		100		125		125		150		175		175		200			
	40	42		50		63		70	80	80		100		125		150		175		200		200		200			
	50	42		50		63		80		100		125		150		150		200									
	60	42		50	63	63	70	80		100		125		150		175		200									
1150	10	35		35		50		50		63		70	80	80		100		100		125		150		150		175	
	15	35		42		50		63		63	70	80		100		100		125		150		150		175		200	
	20	35		42		50		63		70	80	80		100		125		150		150		175		200		200	
	25	35		50		50		63	70	80		100		125		125		150		175		200		200			
	30	35		50		63		70		80		100		125		125		150		200		200					
	40	42		50		63		80		80		100		125		150		175		200							
	50	42		50		63		80		100		125		150		175		200									
	60	42		63		70		80		100		125		150		175		200									
950	10	35		42		50		63		63		70	80	80		100		125		125		150		150		175	
	15	35		42		50		63		70		80		100		125		125		150		150		175		200	
	20	35		42		50		63	70	70	80	100		100		125		150		150		175		200			
	25	35		50		63		70		80		100		125		125		150		175		200		200			
	30	35		50		63		70	80	80		100		125		150		175		200		200					
	40	42		50		63		80		100		125		125		150		200		200							
	50	42		63		63		80		100		125		150		175		200									
	60	50		63		70		100		125		125		150		175											

Note) See the table on page 27 when selecting a model with a motor.

Sizing Chart (Sizing Table 2)

Common for EWJ/EW/SWJ/SW Series

Input r/min	Reduction ratio	Motor kW 0.2 EWJ	0.2 SWJ	0.4 EWJ	0.4 SWJ	0.75 EWJ EW	0.75 SWJ SW	1.5 EWJ EW	1.5 SWJ SW	2.2 EWJ EW	2.2 SWJ SW	3.7 EWJ EW	3.7 SWJ SW	5.5 EW	5.5 SW	7.5 EW	7.5 SW	11 EW	11 SW	15 EW	15 SW	18.5 EW	18.5 SW	22 EW	22 SW	30 EW	30 SW
1750	10	35		42		50		50	63	63		70	80	80		100		125		125		150		150		175	
	15	35		42		50		63		70	80	80		100		100		125		150		150		175		200	
	20	35		50		50		70		70	80	80		100		125		150		150		175		200		200	
	25	35		50		50	63	70		80		100		125		125		150		175		200		200			
	30	42		50		63		70	80	80		100		125		150		175		175		200					
	40	42		50		63		80		100		125		125		150		175		200							
	50	42		50	63	63	70	80		100		125		150		175		200									
	60	42		63		70	80	100		100		125		175		175											
1450	10	35		42		50		50	63	63	70	70	80	80		100		125		125		150		150		175	
	15	35		42		50		63		70	80	80		100		125		125		150		175		175		200	
	20	35		50		50	63	70		80		100		100		125		150		175		175		200			
	25	35		50		63		70	80	80		100		125		125		150		175		200					
	30	42		50		63		70	80	80		100		125		150		175		200		200					
	40	42		50		63	70	80		100		125		150		150		200									
	50	42		50	63	63	70	80		100		125		150		175		200									
	60	50		63		70	80	100		100		150		175		200											
1150	10	35		42		50		63		63	70	80		80		100		125		150		150		150		175	
	15	35		50		50		63		70	80	80		100		125		150		150		175		200		200	
	20	35		50		50		63	70	80		100		125		125		150		175		200		200			
	25	42		50		50		70	80	80		100		125		150		175		200		200					
	30	42		50		50		80		80		100		125		150		175		200							
	40	42		50		63		80		100		125		150		175		200									
	50	50		63		63	70	80		100		125		150		175											
	60	50		63		63	80	100		125		150		175		200											
950	10	35		42		50		63		63	70	80		100		100		125		150		150		175		200	
	15	35		50		50		63	70	70	80	100		100		125		150		150		175		200			
	20	35		50		63		70	80	80		100		125		125		150		175		200		200			
	25	42		50		63		80		80		100		125		150		175		200							
	30	42		50		63		80		100		125		125		150		200		200							
	40	42		63		63	70	80		100		125		150		175		200									
	50	50		63		70	80	100		100		125		175		200											
	60	50		63		80		100		125		150		175		200											

Note) See the table on page 27 when selecting a model with a motor.

Sizing Chart (Sizing Table 3)

Transfer Capacity Table (EWJ25 to 70, SWJ25 to 70)

Size	Input	1750 r/min		1450 r/min		1150 r/min		950 r/min		500 r/min		100 r/min	
	Reduction ratio	Input kW	Output torque N·m {kgf·m}	Input kW	Output torque N·m {kgf·m}	Input kW	Output torque N·m {kgf·m}	Input kW	Output torque N·m {kgf·m}	Input kW	Output torque N·m {kgf·m}	Input kW	Output torque N·m {kgf·m}
EWJ25 SWJ25	10	0.27	12.4{1.26}	0.24	13.3{1.36}	0.22	14.8{1.51}	0.18	14.9{1.52}	0.10	14.9{1.52}	0.021	14.9{1.52}
	15	0.20	12.9{1.31}	0.18	13.9{1.41}	0.16	14.9{1.52}	0.13	14.9{1.52}	0.07	14.9{1.52}	0.016	14.9{1.52}
	20	0.16	13.5{1.38}	0.15	14.5{1.48}	0.12	14.9{1.52}	0.10	14.9{1.52}	0.06	14.9{1.52}	0.013	14.9{1.52}
	25	0.14	13.9{1.42}	0.13	14.9{1.52}	0.10	14.9{1.52}	0.09	14.9{1.52}	0.05	14.9{1.52}	0.011	14.9{1.52}
	30	0.12	13.6{1.39}	0.11	14.7{1.50}	0.09	14.9{1.52}	0.08	14.9{1.52}	0.04	14.9{1.52}	0.010	14.9{1.52}
	40	0.10	13.9{1.42}	0.09	14.9{1.52}	0.08	14.9{1.52}	0.07	14.9{1.52}	0.04	14.9{1.52}	0.009	14.9{1.52}
	50	0.09	13.9{1.42}	0.08	14.4{1.47}	0.07	14.9{1.52}	0.06	14.9{1.52}	0.03	14.9{1.52}	0.008	14.9{1.52}
	60	0.07	13.0{1.33}	0.06	13.5{1.37}	0.06	13.9{1.42}	0.05	14.3{1.46}	0.03	14.3{1.46}	0.007	14.3{1.46}
EWJ35 SWJ35	10	0.59	27.6{2.81}	0.53	29.7{3.03}	0.49	33.8{3.45}	0.44	36.5{3.73}	0.24	37.3{3.81}	0.053	37.3{3.81}
	15	0.41	27.5{2.81}	0.37	29.7{3.03}	0.34	33.5{3.42}	0.32	37.7{3.85}	0.18	37.7{3.85}	0.039	37.7{3.85}
	20	0.33	27.8{2.84}	0.30	30.0{3.06}	0.27	33.7{3.44}	0.26	37.7{3.85}	0.14	37.7{3.85}	0.032	37.7{3.85}
	25	0.28	28.7{2.93}	0.26	31.0{3.16}	0.23	34.7{3.54}	0.21	37.7{3.85}	0.12	37.7{3.85}	0.027	37.7{3.85}
	30	0.25	29.3{2.99}	0.23	31.6{3.22}	0.21	35.3{3.60}	0.19	37.7{3.85}	0.11	37.7{3.85}	0.025	37.7{3.85}
	40	0.20	28.8{2.94}	0.19	31.1{3.18}	0.17	34.7{3.54}	0.16	37.7{3.85}	0.09	37.7{3.85}	0.022	37.7{3.85}
	50	0.18	29.6{3.02}	0.16	31.9{3.26}	0.15	35.5{3.63}	0.14	37.7{3.85}	0.08	37.7{3.85}	0.019	37.7{3.85}
	60	0.16	29.5{3.01}	0.15	31.8{3.25}	0.14	35.3{3.61}	0.12	37.0{3.78}	0.07	37.0{3.78}	0.018	37.0{3.78}
EWJ42 SWJ42	10	0.87	41.1{4.20}	0.81	45.5{4.65}	0.73	51.3{5.23}	0.67	56.5{5.76}	0.45	68.8{7.02}	0.097	68.8{7.02}
	15	0.67	45.2{4.61}	0.61	48.8{4.98}	0.55	55.0{5.62}	0.50	59.5{6.07}	0.32	68.9{7.03}	0.070	68.9{7.03}
	20	0.54	46.3{4.73}	0.49	50.0{5.10}	0.45	56.1{5.73}	0.40	60.6{6.19}	0.26	69.0{7.04}	0.058	69.0{7.04}
	25	0.46	47.8{4.88}	0.42	51.6{5.27}	0.38	57.8{5.90}	0.35	62.5{6.38}	0.22	69.0{7.04}	0.049	69.0{7.04}
	30	0.40	47.3{4.83}	0.37	51.1{5.21}	0.33	57.0{5.82}	0.30	61.6{6.29}	0.19	69.0{7.04}	0.045	69.0{7.04}
	40	0.33	47.8{4.88}	0.30	51.6{5.27}	0.28	57.5{5.87}	0.25	62.1{6.34}	0.16	69.0{7.04}	0.039	69.0{7.04}
	50	0.29	49.1{5.01}	0.26	53.0{5.40}	0.24	58.9{6.01}	0.22	63.6{6.49}	0.14	69.0{7.04}	0.034	69.0{7.04}
	60	0.26	50.1{5.12}	0.24	54.1{5.52}	0.22	60.0{6.13}	0.20	63.2{6.45}	0.12	64.3{6.56}	0.029	64.3{6.56}
EWJ50	10	1.70	84{ 8.6}	1.54	91{ 9.3}	1.34	99{10.1}	1.20	106{10.9}	0.67	109{11.1}	0.14	109{11.1}
	15	1.28	91{ 9.3}	1.16	99{10.1}	1.03	109{11.1}	0.86	109{11.1}	0.47	109{11.1}	0.10	109{11.1}
	20	1.02	94{ 9.6}	0.92	101{10.4}	0.80	109{11.1}	0.67	109{11.1}	0.37	109{11.1}	0.08	109{11.1}
	25	0.85	95{ 9.7}	0.76	101{10.3}	0.66	108{11.1}	0.56	109{11.1}	0.31	109{11.1}	0.07	109{11.1}
	30	0.75	95{ 9.7}	0.68	103{10.5}	0.59	109{11.1}	0.50	109{11.1}	0.28	109{11.1}	0.07	109{11.1}
	40	0.59	94{ 9.6}	0.53	101{10.3}	0.47	108{11.1}	0.40	109{11.1}	0.22	109{11.1}	0.05	109{11.1}
	50	0.48	91{ 9.3}	0.43	98{10.0}	0.38	104{10.6}	0.34	109{11.1}	0.19	109{11.1}	0.05	109{11.1}
	60	0.40	86{ 8.8}	0.36	92{ 9.4}	0.32	98{10.0}	0.28	103{10.5}	0.17	106{10.8}	0.04	106{10.8}
SWJ50	10	1.56	77{ 7.9}	1.40	83{ 8.5}	1.28	94{ 9.6}	1.15	102{10.4}	0.67	109{11.1}	0.14	109{11.1}
	15	1.13	81{ 8.2}	1.02	87{ 8.9}	0.89	94{ 9.6}	0.78	99{10.1}	0.47	109{11.1}	0.10	109{11.1}
	20	0.91	84{ 8.6}	0.82	91{ 9.2}	0.71	97{ 9.9}	0.63	102{10.4}	0.37	109{11.1}	0.08	109{11.1}
	25	0.77	86{ 8.8}	0.69	92{ 9.4}	0.58	96{ 9.8}	0.51	101{10.3}	0.31	109{11.1}	0.07	109{11.1}
	30	0.65	83{ 8.5}	0.60	90{ 9.2}	0.52	97{ 9.9}	0.46	102{10.4}	0.28	109{11.1}	0.06	109{11.1}
	40	0.52	84{ 8.5}	0.47	90{ 9.1}	0.41	96{ 9.8}	0.36	101{10.3}	0.22	109{11.1}	0.05	109{11.1}
	50	0.42	81{ 8.2}	0.38	86{ 8.8}	0.34	92{ 9.4}	0.30	97{ 9.9}	0.19	109{11.1}	0.05	109{11.1}
	60	0.37	80{ 8.2}	0.34	86{ 8.7}	0.29	91{ 9.3}	0.26	95{ 9.7}	0.17	105{10.7}	0.04	106{10.8}
EWJ63	10	3.22	161{16.4}	2.98	178{18.2}	2.65	197{20.1}	2.36	211{21.6}	1.36	224{22.9}	0.29	224{22.9}
	15	2.41	174{17.7}	2.23	192{19.6}	1.98	212{21.6}	1.75	224{22.9}	0.96	224{22.9}	0.21	224{22.9}
	20	1.91	179{18.2}	1.76	196{20.0}	1.56	215{22.0}	1.36	224{22.9}	0.75	224{22.9}	0.17	224{22.9}
	25	1.57	179{18.3}	1.44	196{20.0}	1.27	213{21.7}	1.12	224{22.9}	0.62	224{22.9}	0.14	224{22.9}
	30	1.38	180{18.4}	1.29	198{20.2}	1.15	218{22.3}	1.00	224{22.9}	0.56	224{22.9}	0.13	224{22.9}
	40	1.09	178{18.2}	1.01	196{20.0}	0.91	215{21.9}	0.80	224{22.9}	0.46	224{22.9}	0.11	224{22.9}
	50	0.88	173{17.7}	0.81	188{19.2}	0.73	205{20.9}	0.65	217{22.1}	0.39	224{22.9}	0.09	224{22.9}
	60	0.72	163{16.7}	0.67	177{18.1}	0.59	192{19.6}	0.53	203{20.7}	0.31	204{20.8}	0.07	204{20.8}
SWJ63	10	2.70	135{13.7}	2.43	145{14.8}	2.20	164{16.8}	1.99	178{18.1}	1.36	224{22.9}	0.29	224{22.9}
	15	1.95	140{14.3}	1.76	152{15.5}	1.59	170{17.4}	1.44	184{18.8}	0.96	224{22.9}	0.21	224{22.9}
	20	1.56	145{14.8}	1.41	157{16.0}	1.28	176{17.9}	1.16	190{19.4}	0.75	224{22.9}	0.17	224{22.9}
	25	1.32	151{15.4}	1.20	163{16.6}	1.08	182{18.5}	0.99	197{20.1}	0.62	224{22.9}	0.14	224{22.9}
	30	1.13	147{15.0}	1.03	158{16.2}	0.93	177{18.0}	0.85	191{19.5}	0.56	224{22.9}	0.13	224{22.9}
	40	0.92	150{15.3}	0.84	163{16.6}	0.76	181{18.5}	0.70	196{20.0}	0.46	224{22.9}	0.11	224{22.9}
	50	0.79	155{15.8}	0.72	168{17.1}	0.66	186{19.0}	0.61	202{20.6}	0.39	224{22.9}	0.09	224{22.9}
	60	0.70	158{16.2}	0.64	171{17.5}	0.59	190{19.4}	0.52	200{20.4}	0.31	204{20.8}	0.07	204{20.8}
EWJ70	10	4.28	214{21.9}	3.85	231{23.6}	3.51	263{26.8}	3.16	284{29.0}	1.96	324{33.1}	0.42	324{33.1}
	15	3.09	225{22.9}	2.80	242{24.7}	2.54	273{27.9}	2.29	295{30.1}	1.38	324{33.1}	0.30	324{33.1}
	20	2.50	235{24.0}	2.26	254{25.9}	2.05	285{29.1}	1.86	309{31.5}	1.08	324{33.1}	0.24	324{33.1}
	25	2.12	243{24.8}	1.92	263{26.8}	1.74	294{30.0}	1.56	314{32.0}	0.89	324{33.1}	0.20	324{33.1}
	30	1.80	236{24.0}	1.64	255{26.0}	1.49	284{29.0}	1.36	308{31.4}	0.81	324{33.1}	0.19	324{33.1}
	40	1.45	241{24.6}	1.35	265{27.0}	1.22	295{30.1}	1.11	315{32.2}	0.65	324{33.1}	0.15	324{33.1}
	50	1.18	235{23.9}	1.10	258{26.3}	0.99	283{28.9}	0.89	302{30.8}	0.55	324{33.1}	0.13	324{33.1}
	60	0.97	222{22.7}	0.90	243{24.8}	0.81	266{27.1}	0.73	282{28.8}	0.46	311{31.7}	0.11	311{31.8}
SWJ70	10	3.14	157{16.0}	2.94	176{18.0}	2.62	196{20.0}	2.35	211{21.6}	1.62	268{27.4}	0.39	300{30.6}
	15	2.43	176{18.0}	2.27	197{20.1}	1.95	210{21.5}	1.76	227{23.1}	1.18	276{28.1}	0.30	317{32.3}
	20	2.03	191{19.5}	1.94	217{22.2}	1.63	227{23.1}	1.48	245{25.0}	0.92	277{28.2}	0.23	310{31.6}
	25	1.71	196{20.0}	1.56	213{21.7}	1.38	233{23.8}	1.25	252{25.7}	0.72	263{26.8}	0.19	301{30.7}
	30	1.45	190{19.4}	1.36	212{21.6}	1.24	236{24.1}	1.12	254{25.9}	0.71	283{28.9}	0.18	317{32.3}
	40	1.20	200{20.4}	1.13	222{22.7}	1.00	242{24.7}	0.91	259{26.4}	0.58	292{29.8}	0.15	316{32.2}
	50	0.97	194{19.8}	0.91	214{21.8}	0.81	233{23.7}	0.73	248{25.3}	0.46	273{27.9}	0.12	294{30.0}
	60	0.80	184{18.8}	0.75	201{20.6}	0.66	218{22.3}	0.60	232{23.6}	0.38	253{25.9}	0.10	276{28.2}

When running a speed within the shaded boxes , and also continuously for more than one hour, refer to the thermal rating factor on page 17 to factor this into your selection.

Sizing Chart (Sizing Table 3)

Transfer Capacity Table (EW80 to 200, SW80 to 200)

Size	Input Reduction ratio	1750 r/min Input kW	1750 r/min Output torque N·m {kgf·m}	1450 r/min Input kW	1450 r/min Output torque N·m {kgf·m}	1150 r/min Input kW	1150 r/min Output torque N·m {kgf·m}	950 r/min Input kW	950 r/min Output torque N·m {kgf·m}	500 r/min Input kW	500 r/min Output torque N·m {kgf·m}	100 r/min Input kW	100 r/min Output torque N·m {kgf·m}
EW80 SW80	10	6.52	329{33.6}	6.16	372{38.0}	5.52	417{42.5}	4.86	441{45.0}	2.83	474{48.3}	0.61	474{48.3}
	15	4.88	358{36.5}	4.53	397{40.5}	3.98	434{44.3}	3.52	459{46.9}	1.98	473{48.3}	0.44	474{48.3}
	20	3.88	370{37.7}	3.62	412{42.0}	3.18	449{45.8}	2.80	473{48.3}	1.55	473{48.3}	0.34	473{48.3}
	25	3.21	374{38.1}	2.99	414{42.3}	2.67	460{46.9}	2.31	474{48.3}	1.28	474{48.3}	0.29	474{48.3}
	30	2.77	371{37.9}	2.62	416{42.4}	2.30	451{46.0}	2.03	474{48.3}	1.14	474{48.3}	0.27	474{48.3}
	40	2.17	370{37.8}	2.05	413{42.2}	1.86	461{47.0}	1.62	473{48.3}	0.92	473{48.3}	0.22	474{48.3}
	50	1.76	361{36.8}	1.66	400{40.8}	1.50	443{45.2}	1.36	473{48.3}	0.78	474{48.3}	0.19	474{48.3}
	60	1.44	342{34.9}	1.35	376{38.4}	1.21	414{42.3}	1.07	429{43.8}	0.62	429{43.8}	0.15	430{43.8}
EW100 SW100	10	10.81	552{56.3}	9.83	602{61.4}	9.10	696{71.1}	8.14	748{76.3}	5.29	899{91.8}	1.14	899{91.8}
	15	8.05	600{61.2}	7.37	657{67.1}	6.66	741{75.6}	5.88	784{80.0}	3.68	900{91.8}	0.81	900{91.8}
	20	6.35	616{62.8}	5.85	677{69.1}	5.28	760{77.5}	4.67	804{82.0}	2.88	900{91.8}	0.64	900{91.8}
	25	5.06	603{61.5}	4.81	683{69.7}	4.39	774{79.0}	3.91	822{83.9}	2.16	822{83.9}	0.49	822{83.9}
	30	4.52	623{63.6}	4.18	685{69.9}	3.81	774{78.9}	3.39	818{83.5}	2.09	899{91.8}	0.48	900{91.8}
	40	3.52	618{63.1}	3.27	680{69.4}	3.04	778{79.4}	2.74	829{84.6}	1.68	900{91.8}	0.40	900{91.8}
	50	2.75	584{59.6}	2.64	661{67.5}	2.43	748{76.3}	2.23	812{82.9}	1.30	828{84.5}	0.31	830{84.7}
	60	2.27	559{57.1}	2.16	628{64.1}	1.98	705{72.0}	1.72	722{73.6}	0.98	719{73.4}	0.24	720{73.5}
EW125 SW125	10	17.70	909{92.7}	16.42	1012{103}	14.66	1130{115}	13.80	1279{131}	9.55	1637{167}	2.14	1705{174}
	15	13.13	987{101}	12.20	1099{112}	10.98	1233{126}	10.32	1390{142}	6.90	1704{174}	1.52	1704{174}
	20	10.27	1011{103}	9.57	1126{115}	8.69	1274{130}	8.10	1420{145}	5.33	1704{174}	1.19	1704{174}
	25	8.46	1020{104}	7.64	1098{112}	7.20	1286{131}	6.70	1429{146}	4.27	1648{168}	0.96	1648{168}
	30	7.33	1025{105}	6.85	1141{117}	6.23	1285{131}	5.88	1444{147}	3.88	1704{174}	0.90	1705{174}
	40	5.63	1015{104 }	5.28	1131{115}	4.85	1281{131}	4.55	1425{145}	3.07	1705{174}	0.73	1705{174}
	50	4.55	986{101}	4.15	1065{109}	3.95	1245{127}	3.71	1382{141}	2.54	1656{169}	0.62	1666{170}
	60	3.72	936{95.5}	3.42	1018{104}	3.25	1182{121}	3.04	1306{133}	1.91	1430{146}	0.47	1439{147}
EW150 SW150	10	26.45	1364{139}	24.52	1519{155}	22.36	1734{177}	20.31	1894{193}	14.51	2508{256}	3.29	2646{270}
	15	19.58	1482{151}	18.19	1650{168}	16.62	1883{192}	15.21	2068{211}	10.41	2600{265}	2.33	2646{270}
	20	15.33	1519{155}	14.26	1691{173}	12.65	1869{191}	12.05	2134{218}	8.19	2646{270}	1.83	2646{270}
	25	12.45	1522{155}	11.59	1695{173}	10.48	1906{195}	9.85	2143{219}	6.69	2646{270}	1.50	2646{270}
	30	10.87	1539{157}	10.15	1713{175}	9.35	1956{200}	8.31	2074{212}	5.42	2421{247}	1.38	2646{270}
	40	8.36	1525{156}	7.83	1698{173}	7.03	1883{192}	6.74	2144{219}	4.69	2646{270}	1.12	2646{270}
	50	6.62	1474{151}	6.21	1642{168}	5.68	1849{189}	5.38	2077{212}	3.89	2646{270}	0.93	2646{270}
	60	5.43	1402{143}	5.11	1561{159}	4.69	1758{179}	4.45	1974{201}	3.31	2563{262}	0.82	2586{264}
EW175 SW175	10	37.09	1921{196}	34.37	2139{218}	30.78	2400{245}	27.07	2539{259}	17.86	3110{317}	4.19	3395{347}
	15	27.43	2088{213}	25.06	2288{234}	21.87	2496{255}	19.27	2641{270}	12.78	3223{329}	2.96	3396{347}
	20	21.44	2140{218}	19.82	2370{242}	17.27	2575{263}	15.24	2725{278}	10.15	3318{339}	2.31	3396{347}
	25	16.85	2068{211}	15.68	2302{235}	14.36	2625{268}	12.70	2777{283}	8.50	3378{345}	1.93	3395{347}
	30	15.16	2170{221}	13.46	2300{235}	11.63	2467{252}	10.23	2589{264}	6.66	3031{309}	1.74	3396{347}
	40	11.62	2149{219}	10.87	2393{244}	9.70	2640{269}	8.62	2794{285}	5.89	3390{346}	1.40	3396{347}
	50	8.93	2001{204}	8.37	2228{227}	7.75	2544{260}	7.18	2795{285}	4.95	3396{347}	1.20	3396{347}
	60	7.52	1973{201}	7.06	2197{224}	6.35	2428{248}	6.12	2773{283}	4.28	3396{347}	1.05	3396{347}
EW200 SW200	10	50.13	2597{265}	46.43	2892{295}	42.28	3301{337}	39.17	3682{376}	26.44	4613{471}	7.05	5704{582}
	15	36.95	2813{287}	34.28	3132{320}	31.29	3576{365}	28.46	3907{399}	18.91	4776{487}	4.99	5703{582}
	20	28.93	2888{295}	26.88	3216{328}	24.59	3671{375}	22.49	4025{411}	15.01	4910{501}	3.92	5704{582}
	25	22.86	2804{286}	21.27	3122{319}	19.49	3564{364}	18.16	3975{406}	12.56	4992{509}	3.27	5704{582}
	30	20.38	2916{298}	19.00	3247{331}	17.29	3671{375}	15.21	3855{393}	9.94	4526{462}	2.95	5704{582}
	40	15.67	2894{295}	14.65	3223{329}	13.51	3680{376}	12.66	4105{419}	8.71	5018{512}	2.39	5703{582}
	50	12.11	2709{276}	11.35	3017{308}	10.50	3444{352}	9.87	3842{392}	7.41	5073{518}	2.06	5703{582}
	60	10.15	2646{270}	9.53	2947{301}	8.85	3365{343}	8.34	3754{383}	6.55	5137{524}	1.83	5703{582}

When running a speed within the shaded boxes , and also continuously for more than two hours, refer to the thermal rating factor on page 17 to factor this into your selection.

Technical Data

■ Actual Reduction Ratio

Reduction ratios for EWJ/EW/EWJM(R)/EWM(R)/SWJ/SW/SWJM(R)/SWM(R) series are all actual.

■ Allowable Loads on Shafts

1. Solid output shaft Allowable radial load

EWJ/EW/EWJM(R)/EWM(R) Series

Size	EWJ25	EWJ35	EWJ42	EWJ50	EWJ63	EWJ70	EW80	EW100	EW125	EW150	EW175	EW200
Allowable radial load N {kgf}	666 {68}	1019 {104}	1450 {148}	2264 {231}	2901 {296}	3881 {396}	7575 {773}	11505 {1174}	15131 {1544}	21825 {2227}	24451 {2495}	29743 {3035}

SW/SWM(R) Series (Shaft Arrangement: SLF/SRF)

Size	SW80	SW100	SW125	SW150	SW175	SW200
Allowable radial load N {kgf}	10427 {1064}	11525 {1176}	21184 {2162}	22754 {2322}	26558 {2710}	29743 {3035}

2. Hollow output shaft Allowable radial load

EW/EWM(R) Series (Shaft Arrangement: H)

Size	Reduction ratio	Input speed											
		1750 r/min		1450 r/min		1150 r/min		950 r/min		500 r/min		100 r/min	
		N	{kgf}	N	{kgf}	N	{kgf}	N	{kgf}	N	{kgf}	N	{kgf}
EW80	10	3383	{345}	3464	{353}	3661	{374}	3916	{400}	5258	{537}	8310	{848}
	15	4192	{428}	4390	{448}	4707	{480}	5027	{513}	6719	{686}	8310	{848}
	20	4841	{494}	5076	{518}	5457	{557}	5833	{595}	7787	{795}	8310	{848}
	25	5403	{551}	5664	{578}	6078	{620}	6556	{669}	8661	{884}	8310	{848}
	30	5889	{601}	6193	{632}	6677	{681}	7144	{729}	8310	{848}	8310	{848}
	40	6724	{686}	7061	{721}	7590	{774}	8173	{834}	8310	{848}	8310	{848}
	50	7463	{762}	7866	{803}	8310	{848}	8310	{848}	8310	{848}	8310	{848}
	60	8155	{832}	8310	{848}	8310	{848}	8310	{848}	8310	{848}	8310	{848}
EW100	10	4483	{457}	4705	{480}	4879	{498}	5217	{532}	6477	{661}	9369	{956}
	15	5568	{568}	5850	{597}	6252	{638}	6680	{682}	8291	{846}	9369	{956}
	20	6432	{656}	6764	{690}	7261	{741}	7757	{792}	9369	{956}	9369	{956}
	25	7226	{737}	7543	{770}	8054	{822}	8598	{877}	9369	{956}	9369	{956}
	30	7786	{795}	8212	{838}	8825	{901}	9369	{956}	9369	{956}	9369	{956}
	40	8863	{904}	9357	{955}	9369	{956}	9369	{956}	9369	{956}	9369	{956}
	50	9369	{956}	9369	{956}	9369	{956}	9369	{956}	9369	{956}	9369	{956}
	60	9369	{956}	9369	{956}	9369	{956}	9369	{956}	9369	{956}	9369	{956}
EW125	10	7715	{787}	8025	{819}	8503	{868}	8740	{892}	10585	{1080}	13083	{1335}
	15	9500	{969}	9932	{1014}	10547	{1076}	10983	{1121}	13083	{1335}	13083	{1335}
	20	10913	{1114}	11440	{1167}	12146	{1239}	12715	{1297}	13083	{1335}	13083	{1335}
	25	12126	{1237}	12860	{1312}	13083	{1335}	13083	{1335}	13083	{1335}	13083	{1335}
	30	13083	{1335}	13083	{1335}	13083	{1335}	13083	{1335}	13083	{1335}	13083	{1335}
	40	13083	{1335}	13083	{1335}	13083	{1335}	13083	{1335}	13083	{1335}	13083	{1335}
	50	13083	{1335}	13083	{1335}	13083	{1335}	13083	{1335}	13083	{1335}	13083	{1335}
	60	13083	{1335}	13083	{1335}	13083	{1335}	13083	{1335}	13083	{1335}	13083	{1335}
EW150	10	6706	{684}	6913	{705}	7148	{729}	7449	{760}	8665	{884}	19965	{2037}
	15	8523	{870}	8859	{904}	9265	{945}	9685	{988}	11897	{1214}	24265	{2476}
	20	9950	{1015}	10385	{1060}	11091	{1132}	11421	{1165}	14145	{1443}	24265	{2476}
	25	11168	{1140}	11687	{1193}	12415	{1267}	12921	{1319}	16039	{1637}	24265	{2476}
	30	12195	{1244}	12787	{1305}	13541	{1382}	14512	{1481}	18306	{1868}	24265	{2476}
	40	13982	{1427}	14697	{1500}	15748	{1607}	16433	{1677}	20444	{2086}	24265	{2476}
	50	15573	{1589}	16402	{1674}	17528	{1789}	18415	{1879}	22705	{2317}	24265	{2476}
	60	16989	{1734}	17921	{1829}	19181	{1957}	20196	{2061}	24265	{2476}	24265	{2476}
EW175	10	8504	{868}	8770	{895}	9229	{942}	9866	{1007}	12232	{1248}	24451	{2495}
	15	10827	{1105}	11386	{1162}	12224	{1247}	13057	{1332}	16214	{1655}	24451	{2495}
	20	12635	{1289}	13264	{1353}	14276	{1457}	15247	{1556}	18942	{1933}	24451	{2495}
	25	14373	{1467}	15060	{1537}	15926	{1625}	17074	{1742}	21207	{2164}	24451	{2495}
	30	15480	{1580}	16538	{1688}	17894	{1826}	19147	{1954}	24040	{2453}	24451	{2495}
	40	17723	{1808}	18632	{1901}	20066	{2048}	21418	{2185}	24451	{2495}	24451	{2495}
	50	19857	{2026}	20925	{2135}	22298	{2275}	23596	{2408}	24451	{2495}	24451	{2495}
	60	21499	{2194}	22679	{2314}	24369	{2487}	24451	{2495}	24451	{2495}	24451	{2495}
EW200	10	10452	{1067}	10795	{1101}	11190	{1142}	11485	{1172}	14045	{1433}	29131	{2973}
	15	13202	{1347}	13736	{1402}	14388	{1468}	15157	{1547}	18819	{1920}	35790	{3652}
	20	15347	{1566}	16028	{1636}	16875	{1722}	17795	{1816}	22106	{2256}	35790	{3652}
	25	17397	{1775}	18230	{1860}	19281	{1967}	20163	{2057}	24841	{2535}	35790	{3652}
	30	18758	{1914}	19675	{2008}	20990	{2142}	22473	{2293}	28250	{2883}	35790	{3652}
	40	21447	{2189}	22548	{2301}	23955	{2444}	25221	{2574}	31346	{3199}	35790	{3652}
	50	23993	{2448}	25282	{2580}	26940	{2749}	28363	{2894}	34615	{3532}	35790	{3652}
	60	26029	{2656}	27459	{2802}	29305	{2990}	30897	{3153}	35790	{3652}	35790	{3652}

2. Hollow output shaft Allowable radial load

SWJ/SWJM(R)/SW/SWM(R) Series

Size	Reduction ratio	Input speed											
		1750 r/min		1450 r/min		1150 r/min		950 r/min		500 r/min		100 r/min	
		N	{kgf}	N	{kgf}	N	{kgf}	N	{kgf}	N	{kgf}	N	{kgf}
SWJ25	10	701	{72}	743	{76}	793	{81}	850	{87}	850	{87}	850	{87}
	30	850	{87}	850	{87}	850	{87}	850	{87}	850	{87}	850	{87}
	60	850	{87}	850	{87}	850	{87}	850	{87}	850	{87}	850	{87}
SWJ35	10	1468	{150}	1553	{158}	1653	{169}	1742	{178}	2131	{217}	2391	{244}
	30	2226	{227}	2342	{239}	2391	{244}	2391	{244}	2391	{244}	2391	{244}
	60	2391	{244}	2391	{244}	2391	{244}	2391	{244}	2391	{244}	2391	{244}
SWJ42	10	1782	{182}	1878	{192}	2005	{205}	2113	{216}	2529	{258}	3783	{386}
	30	2681	{274}	2845	{290}	3055	{312}	3230	{330}	3783	{386}	3783	{386}
	60	3428	{350}	3634	{371}	3783	{386}	3783	{386}	3783	{386}	3783	{386}
SWJ50	10	2267	{231}	2405	{245}	2565	{262}	2722	{278}	3305	{337}	5517	{563}
	30	3514	{359}	3733	{381}	4011	{409}	4263	{435}	5262	{537}	5517	{563}
	60	4603	{470}	4892	{499}	5268	{538}	5517	{563}	5517	{563}	5517	{563}
SWJ63	10	2304	{235}	2426	{248}	2570	{262}	2700	{276}	3153	{322}	6505	{664}
	30	3595	{367}	3811	{389}	4080	{416}	4328	{442}	5404	{551}	7066	{721}
	60	4771	{487}	5062	{517}	5437	{555}	5864	{598}	7066	{721}	7066	{721}
SWJ70	10	2607	{266}	2711	{277}	2854	{291}	2985	{305}	3591	{366}	6990	{713}
	30	4119	{420}	4337	{443}	4617	{471}	4878	{498}	6103	{623}	9320	{951}
	60	5499	{561}	5832	{595}	6290	{642}	6704	{684}	8385	{856}	9320	{951}
SW80	10	3383	{345}	3464	{353}	3661	{374}	3916	{400}	5258	{537}	10956	{1118}
	15	4192	{428}	4390	{448}	4707	{480}	5027	{513}	6719	{686}	13274	{1354}
	20	4841	{494}	5076	{518}	5457	{557}	5833	{595}	7787	{795}	15011	{1532}
	25	5403	{551}	5664	{578}	6078	{620}	6556	{669}	8661	{884}	15513	{1583}
	30	5889	{601}	6193	{632}	6677	{681}	7144	{729}	9389	{958}	15513	{1583}
	40	6724	{686}	7061	{721}	7590	{774}	8173	{834}	10643	{1086}	15513	{1583}
	50	7463	{762}	7866	{803}	8439	{861}	9028	{921}	11693	{1193}	15513	{1583}
	60	8155	{832}	8621	{880}	9269	{946}	9983	{1019}	12824	{1309}	15513	{1583}
SW100	10	4106	{419}	4292	{438}	4388	{448}	4661	{476}	5856	{598}	13136	{1340}
	15	5199	{531}	5443	{555}	5759	{588}	6154	{628}	7899	{806}	16280	{1661}
	20	6070	{619}	6365	{649}	6778	{692}	7239	{739}	9334	{952}	17199	{1755}
	25	6882	{702}	7150	{730}	7567	{772}	8087	{825}	10793	{1101}	17199	{1755}
	30	7432	{758}	7820	{798}	8345	{852}	8911	{909}	11457	{1169}	17199	{1755}
	40	8514	{869}	8970	{915}	9541	{974}	10184	{1039}	13077	{1334}	17199	{1755}
	50	9544	{974}	10004	{1021}	10667	{1088}	11299	{1153}	14715	{1502}	17199	{1755}
	60	10411	{1062}	10956	{1118}	11724	{1196}	12656	{1291}	16297	{1663}	17199	{1755}
SW125	10	7715	{787}	8025	{819}	8503	{868}	8740	{892}	10585	{1080}	22485	{2294}
	15	9500	{969}	9932	{1014}	10547	{1076}	10983	{1121}	13710	{1399}	27605	{2817}
	20	10913	{1114}	11440	{1167}	12146	{1239}	12715	{1297}	16022	{1635}	28763	{2935}
	25	12126	{1237}	12860	{1312}	13548	{1382}	14229	{1452}	18015	{1838}	28763	{2935}
	30	13144	{1341}	13824	{1411}	14752	{1505}	15504	{1582}	19539	{1994}	28763	{2935}
	40	14936	{1524}	15738	{1606}	16802	{1715}	17704	{1807}	22240	{2269}	28763	{2935}
	50	16477	{1681}	17489	{1785}	18588	{1897}	19625	{2003}	24524	{2502}	28763	{2935}
	60	17897	{1826}	18981	{1937}	20241	{2065}	21417	{2185}	27148	{2770}	28763	{2935}
SW150	10	6706	{684}	6913	{705}	7148	{729}	7449	{760}	8665	{884}	19965	{2037}
	15	8523	{870}	8859	{904}	9265	{945}	9685	{988}	11897	{1214}	25303	{2582}
	20	9950	{1015}	10385	{1060}	11091	{1132}	11421	{1165}	14145	{1443}	29111	{2970}
	25	11168	{1140}	11687	{1193}	12415	{1267}	12921	{1319}	16039	{1637}	32180	{3284}
	30	12195	{1244}	12787	{1305}	13541	{1382}	14512	{1481}	18306	{1868}	34936	{3565}
	40	13982	{1427}	14697	{1500}	15748	{1607}	16433	{1677}	20444	{2086}	36231	{3697}
	50	15573	{1589}	16402	{1674}	17528	{1789}	18415	{1879}	22705	{2317}	36231	{3697}
	60	16989	{1734}	17921	{1829}	19181	{1957}	20196	{2061}	24727	{2523}	36231	{3697}
SW175	10	8504	{868}	8770	{895}	9229	{942}	9866	{1007}	12232	{1248}	26211	{2675}
	15	10827	{1105}	11386	{1162}	12224	{1247}	13057	{1332}	16214	{1655}	32851	{3352}
	20	12635	{1289}	13264	{1353}	14276	{1457}	15247	{1556}	18942	{1933}	37597	{3836}
	25	14373	{1467}	15060	{1537}	15926	{1625}	17074	{1742}	21207	{2164}	41498	{4235}
	30	15480	{1580}	16538	{1688}	17894	{1826}	19147	{1954}	24040	{2453}	44873	{4579}
	40	17723	{1808}	18632	{1901}	20066	{2048}	21418	{2185}	26611	{2715}	47785	{4876}
	50	19857	{2026}	20925	{2135}	22298	{2275}	23596	{2408}	29387	{2999}	47785	{4876}
	60	21499	{2194}	22679	{2314}	24369	{2487}	25569	{2609}	31814	{3246}	47785	{4876}
SW200	10	10452	{1067}	10795	{1101}	11190	{1142}	11485	{1172}	14045	{1433}	29131	{2973}
	15	13202	{1347}	13736	{1402}	14388	{1468}	15157	{1547}	18819	{1920}	37348	{3811}
	20	15347	{1566}	16028	{1636}	16875	{1722}	17795	{1816}	22106	{2256}	43175	{4406}
	25	17397	{1775}	18230	{1860}	19281	{1967}	20163	{2057}	24841	{2535}	47945	{4892}
	30	18758	{1914}	19675	{2008}	20990	{2142}	22473	{2293}	28250	{2883}	52064	{5313}
	40	21447	{2189}	22548	{2301}	23955	{2444}	25221	{2574}	31346	{3199}	55272	{5640}
	50	23993	{2448}	25282	{2580}	26940	{2749}	28363	{2894}	34615	{3532}	55272	{5640}
	60	26029	{2656}	27459	{2802}	29305	{2990}	30897	{3153}	37462	{3823}	55272	{5640}

Technical Data

3. Hollow output shaft Allowable axial load

EW/EWM(R) Series (Shaft Arrangement: H)

Size	Reduction ratio	Input speed											
		1750 r/min		1450 r/min		1150 r/min		950 r/min		500 r/min		100 r/min	
		N	{kgf}	N	{kgf}	N	{kgf}	N	{kgf}	N	{kgf}	N	{kgf}
EW80	10	4729	{483}	4851	{495}	5224	{533}	5748	{587}	8757	{894}	11593	{1183}
	15	6963	{711}	7423	{757}	8161	{833}	8911	{909}	11593	{1183}	11593	{1183}
	20	8632	{881}	9223	{941}	10165	{1037}	11095	{1132}	11593	{1183}	11593	{1183}
	25	10050	{1025}	10739	{1096}	11593	{1183}	11593	{1183}	11593	{1183}	11593	{1183}
	30	11449	{1168}	11593	{1183}	11593	{1183}	11593	{1183}	11593	{1183}	11593	{1183}
	40	11593	{1183}	11593	{1183}	11593	{1183}	11593	{1183}	11593	{1183}	11593	{1183}
	50	11593	{1183}	11593	{1183}	11593	{1183}	11593	{1183}	11593	{1183}	11593	{1183}
	60	11593	{1183}	11593	{1183}	11593	{1183}	11593	{1183}	11593	{1183}	11593	{1183}
EW100	10	6009	{613}	6410	{654}	6682	{682}	7352	{750}	9965	{1017}	15572	{1589}
	15	8834	{901}	9451	{964}	10346	{1056}	11304	{1154}	15100	{1541}	15572	{1589}
	20	11013	{1124}	11804	{1204}	12983	{1325}	14162	{1445}	15572	{1589}	15572	{1589}
	25	12874	{1314}	13691	{1397}	14970	{1528}	15572	{1589}	15572	{1589}	15572	{1589}
	30	14440	{1474}	15532	{1585}	15572	{1589}	15572	{1589}	15572	{1589}	15572	{1589}
	40	15572	{1589}	15572	{1589}	15572	{1589}	15572	{1589}	15572	{1589}	15572	{1589}
	50	15572	{1589}	15572	{1589}	15572	{1589}	15572	{1589}	15572	{1589}	15572	{1589}
	60	15572	{1589}	15572	{1589}	15572	{1589}	15572	{1589}	15572	{1589}	15572	{1589}
EW125	10	10598	{1081}	11149	{1138}	12050	{1230}	12449	{1270}	16238	{1657}	25833	{2636}
	15	15145	{1545}	16108	{1644}	17495	{1785}	18524	{1890}	24919	{2543}	25833	{2636}
	20	18511	{1889}	19768	{2017}	21477	{2192}	22908	{2338}	25833	{2636}	25833	{2636}
	25	21497	{2194}	23253	{2373}	25075	{2559}	25833	{2636}	25833	{2636}	25833	{2636}
	30	24213	{2471}	25833	{2636}	25833	{2636}	25833	{2636}	25833	{2636}	25833	{2636}
	40	25833	{2636}	25833	{2636}	25833	{2636}	25833	{2636}	25833	{2636}	25833	{2636}
	50	25833	{2636}	25833	{2636}	25833	{2636}	25833	{2636}	25833	{2636}	25833	{2636}
	60	25833	{2636}	25833	{2636}	25833	{2636}	25833	{2636}	25833	{2636}	25833	{2636}
EW150	10	8983	{917}	9318	{951}	9686	{988}	10236	{1044}	12613	{1287}	37818	{3859}
	15	13886	{1417}	14671	{1497}	15650	{1597}	16661	{1700}	22055	{2251}	37818	{3859}
	20	17493	{1785}	18598	{1898}	20355	{2077}	21329	{2176}	28365	{2894}	37818	{3859}
	25	20419	{2084}	21779	{2222}	23695	{2418}	25136	{2565}	33441	{3412}	37818	{3859}
	30	23490	{2397}	25136	{2565}	27298	{2785}	29829	{3044}	37818	{2859}	37818	{3859}
	40	27994	{2857}	30035	{3065}	32979	{3365}	35163	{3588}	37818	{3859}	37818	{3859}
	50	31912	{3256}	34298	{3500}	37568	{3833}	37818	{3859}	37818	{3859}	37818	{3859}
	60	35555	{3628}	37818	{3859}	37818	{3859}	37818	{3859}	37818	{3859}	37818	{3859}
EW175	10	11295	{1153}	11732	{1197}	12567	{1282}	13849	{1413}	18849	{1923}	47638	{4861}
	15	17406	{1776}	18668	{1905}	20575	{2100}	22493	{2295}	30125	{3074}	47638	{4861}
	20	21896	{2234}	23434	{2391}	25877	{2640}	28238	{2881}	37663	{3843}	47638	{4861}
	25	26113	{2665}	27900	{2847}	30225	{3084}	33085	{3376}	44010	{4491}	47638	{4861}
	30	29355	{2995}	31983	{3264}	35450	{3617}	38686	{3948}	47638	{4861}	47638	{4861}
	40	34933	{3565}	37488	{3825}	41361	{4220}	45011	{4593}	47638	{4861}	47638	{4861}
	50	40145	{4096}	43176	{4406}	47188	{4815}	47638	{4861}	47638	{4861}	47638	{4861}
	60	44302	{4521}	47638	{4861}	47638	{4861}	47638	{4861}	47638	{4861}	47638	{4861}
EW200	10	13789	{1407}	14377	{1467}	15056	{1536}	15558	{1588}	20761	{2118}	56379	{5753}
	15	20769	{2119}	21993	{2244}	23536	{2402}	25311	{2583}	33902	{3459}	56379	{5753}
	20	25924	{2645}	27603	{2817}	29762	{3037}	32035	{3269}	42722	{4359}	56379	{5753}
	25	30728	{3136}	32849	{3352}	35610	{3634}	38006	{3878}	50135	{5116}	56379	{5753}
	30	34491	{3520}	36938	{3769}	40411	{4124}	44120	{4502}	56379	{5753}	56379	{5753}
	40	40950	{4179}	43958	{4486}	47920	{4890}	51525	{5258}	56379	{5735}	56379	{5753}
	50	46951	{4791}	50503	{5153}	55206	{5633}	56379	{5753}	56379	{5753}	56379	{5753}
	60	51932	{5299}	55922	{5706}	56379	{5753}	56379	{5753}	56379	{5753}	56379	{5753}

3. Hollow output shaft Allowable axial load

SWJ/SWJM(R)/SW/SWM(R) Series

Size	Reduction ratio	Input speed											
		1750 r/min		1450 r/min		1150 r/min		950 r/min		500 r/min		100 r/min	
		N	{kgf}	N	{kgf}	N	{kgf}	N	{kgf}	N	{kgf}	N	{kgf}
SWJ25	10	1093	{112}	1180	{120}	1287	{131}	1443	{147}	1838	{188}	1838	{188}
	30	1838	{188}	1838	{188}	1838	{188}	1838	{188}	1838	{188}	1838	{188}
	60	1838	{188}	1838	{188}	1838	{188}	1838	{188}	1838	{188}	1838	{188}
SWJ35	10	2787	{284}	3005	{307}	3263	{333}	3501	{357}	4141	{423}	4141	{423}
	30	4141	{423}	4141	{423}	4141	{423}	4141	{423}	4141	{423}	4141	{423}
	60	4141	{423}	4141	{423}	4141	{423}	4141	{423}	4141	{423}	4141	{423}
SWJ42	10	3449	{352}	3698	{377}	4034	{412}	4329	{442}	5505	{562}	5733	{585}
	30	5733	{585}	5733	{585}	5733	{585}	5733	{585}	5733	{585}	5733	{585}
	60	5733	{585}	5733	{585}	5733	{585}	5733	{585}	5733	{585}	5733	{585}
SWJ50	10	3643	{372}	3940	{402}	4291	{438}	4645	{474}	6016	{614}	7546	{770}
	30	6845	{698}	7410	{756}	7546	{770}	7546	{770}	7546	{770}	7546	{770}
	60	7546	{770}	7546	{770}	7546	{770}	7546	{770}	7546	{770}	7546	{770}
SWJ63	10	4148	{423}	4443	{453}	4798	{490}	5126	{523}	6252	{638}	8281	{845}
	30	7512	{767}	8099	{826}	8281	{845}	8281	{845}	8281	{845}	8281	{845}
	60	8281	{845}	8281	{845}	8281	{845}	8281	{845}	8281	{845}	8281	{845}
SWJ70	10	4846	{494}	5107	{521}	5474	{559}	5818	{594}	7475	{763}	11613	{1185}
	30	9409	{960}	10107	{1031}	11031	{1126}	11613	{1185}	11613	{1185}	11613	{1185}
	60	11613	{1185}	11613	{1185}	11613	{1185}	11613	{1185}	11613	{1185}	11613	{1185}
SW80	10	4729	{483}	4851	{495}	5224	{533}	5748	{587}	8757	{894}	13217	{1349}
	15	6963	{711}	7423	{757}	8161	{833}	8911	{909}	12984	{1325}	14190	{1448}
	20	8632	{881}	9223	{941}	10165	{1037}	11095	{1132}	14793	{1509}	14582	{1488}
	25	10050	{1025}	10739	{1096}	11806	{1205}	13000	{1327}	15011	{1532}	14808	{1511}
	30	11449	{1168}	12284	{1254}	13563	{1384}	14794	{1510}	15356	{1567}	15146	{1546}
	40	13579	{1386}	14553	{1485}	15673	{1599}	15626	{1595}	15544	{1586}	15339	{1565}
	50	15451	{1577}	15899	{1622}	15793	{1612}	15731	{1605}	15651	{1597}	15453	{1577}
	60	16067	{1640}	15993	{1632}	15903	{1623}	15876	{1620}	15807	{1613}	15625	{1594}
SW100	10	5189	{529}	5502	{561}	5594	{571}	6102	{623}	8515	{869}	20964	{2139}
	15	8101	{827}	8635	{881}	9339	{953}	10217	{1043}	14258	{1455}	21560	{2200}
	20	10331	{1054}	11039	{1126}	12042	{1229}	13138	{1341}	18234	{1861}	21560	{2200}
	25	12232	{1248}	12949	{1321}	14033	{1432}	15309	{1562}	21560	{2200}	21560	{2200}
	30	13815	{1410}	14830	{1513}	16219	{1655}	17663	{1802}	21560	{2200}	21560	{2200}
	40	16521	{1686}	17760	{1812}	19371	{1977}	21077	{2151}	21560	{2200}	21560	{2200}
	50	18962	{1935}	20295	{2071}	21560	{2200}	21560	{2200}	21560	{2200}	21560	{2200}
	60	21074	{2150}	21560	{2200}	21560	{2200}	21560	{2200}	21560	{2200}	21560	{2200}
SW125	10	10598	{1081}	11149	{1138}	12050	{1230}	12449	{1270}	16238	{1657}	30488	{3111}
	15	15145	{1545}	16108	{1644}	17495	{1785}	18524	{1890}	24919	{2543}	32787	{3346}
	20	18511	{1889}	19768	{2017}	21477	{2192}	22908	{2338}	31008	{3164}	33615	{3430}
	25	21497	{2194}	23253	{2373}	25075	{2559}	26857	{2741}	34822	{3553}	34348	{3505}
	30	24213	{2471}	25979	{2651}	28410	{2899}	30473	{3109}	35522	{3625}	35053	{3577}
	40	28527	{2911}	30668	{3129}	33558	{3424}	36087	{3682}	35921	{3665}	35464	{3619}
	50	32330	{3299}	34989	{3570}	36505	{3725}	36505	{3725}	36278	{3702}	35829	{3656}
	60	35787	{3652}	36505	{3725}	36505	{3725}	36505	{3725}	36505	{3725}	36343	{3708}
SW150	10	8983	{917}	9318	{951}	9686	{988}	10236	{1044}	12613	{1287}	16089	{1642}
	15	13886	{1417}	14671	{1497}	15650	{1597}	16661	{1700}	19897	{2030}	19105	{1949}
	20	17493	{1785}	18598	{1898}	20355	{2077}	21329	{2176}	20914	{2134}	20283	{2070}
	25	20419	{2084}	21779	{2222}	22945	{2341}	22465	{2292}	21372	{2181}	20762	{2119}
	30	23490	{2397}	24185	{2468}	23828	{2431}	23663	{2415}	23011	{2348}	22077	{2253}
	40	24782	{2529}	24569	{2507}	24324	{2482}	23989	{2448}	23261	{2374}	22657	{2312}
	50	24960	{2547}	24767	{2527}	24515	{2501}	24236	{2473}	23479	{2396}	22893	{2336}
	60	25216	{2573}	25053	{2556}	24840	{2535}	24604	{2511}	23869	{2436}	23306	{2378}
SW175	10	11295	{1153}	11732	{1197}	12567	{1282}	13849	{1413}	18849	{1923}	26945	{2749}
	15	17406	{1776}	18668	{1905}	20575	{2100}	22493	{2295}	30125	{3074}	30319	{3094}
	20	21896	{2234}	23434	{2391}	25877	{2640}	28238	{2881}	32465	{3313}	31634	{3228}
	25	26113	{2665}	27900	{2847}	30225	{3084}	33085	{3376}	33208	{3389}	32508	{3317}
	30	29355	{2995}	31983	{3264}	35450	{3617}	35456	{3618}	34756	{3546}	33645	{3433}
	40	34933	{3565}	36177	{3692}	35932	{3666}	35744	{3647}	34957	{3567}	34291	{3499}
	50	36818	{3757}	36608	{3736}	36306	{3705}	36061	{3680}	35373	{3609}	34723	{3543}
	60	36967	{3772}	36774	{3752}	36556	{3730}	36245	{3698}	35588	{3631}	34949	{3566}
SW200	10	13789	{1407}	14377	{1467}	15056	{1536}	15558	{1588}	20761	{2118}	22785	{2325}
	15	20769	{2119}	21993	{2244}	23536	{2402}	25311	{2583}	30020	{3063}	27350	{2791}
	20	25924	{2645}	27603	{2817}	29762	{3037}	32035	{3269}	31325	{3196}	29171	{2977}
	25	30728	{3136}	32849	{3352}	34204	{3490}	33663	{3435}	32237	{3289}	30367	{3099}
	30	34491	{3520}	35464	{3619}	35066	{3578}	34852	{3556}	33993	{3469}	31861	{3251}
	40	36262	{3700}	35987	{3672}	35591	{3632}	35238	{3596}	34291	{3499}	32756	{3342}
	50	36677	{3743}	36451	{3719}	36123	{3686}	35807	{3654}	34763	{3547}	33347	{3403}
	60	36913	{3767}	36714	{3746}	36425	{3717}	36144	{3688}	35098	{3581}	33781	{3447}

Technical Data

■ EWJ/EW/SWJ/SW Worm Starting Efficiency (Reference)

Size	Reduction ratio	Starting efficiency	Size	Reduction ratio	Starting efficiency	Size	Reduction ratio	Starting efficiency	Size	Reduction ratio	Starting efficiency
EWJ25 SWJ25	10	62%	EWJ50 SWJ50	10	64%	EW80 SW80	10	65%	EW150 SW150	10	66%
	15	52%		15	57%		15	57%		15	59%
	20	48%		20	53%		20	53%		20	55%
	25	45%		25	49%		25	50%		25	53%
	30	39%		30	41%		30	42%		30	44%
	40	33%		40	37%		40	37%		40	39%
	50	29%		50	33%		50	34%		50	37%
	60	27%		60	30%		60	32%		60	33%
EWJ35 SWJ35	10	61%	EWJ63 SWJ63	10	64%	EW100 SW100	10	66%	EW175 SW175	10	66%
	15	54%		15	56%		15	59%		15	59%
	20	47%		20	52%		20	54%		20	55%
	25	43%		25	49%		25	51%		25	51%
	30	39%		30	41%		30	44%		30	44%
	40	31%		40	36%		40	38%		40	39%
	50	28%		50	33%		50	35%		50	36%
	60	24%		60	31%		60	33%		60	33%
EWJ42 SWJ42	10	61%	EWJ70 SWJ70	10	63%	EW125 SW125	10	66%	EW200 SW200	10	65%
	15	54%		15	56%		15	59%		15	58%
	20	47%		20	52%		20	55%		20	53%
	25	44%		25	48%		25	51%		25	49%
	30	38%		30	40%		30	44%		30	42%
	40	32%		40	36%		40	39%		40	37%
	50	29%		50	33%		50	35%		50	33%
	60	26%		60	30%		60	32%		60	30%

Note) Starting efficiencies are from a standstill speed of 0 r/min. Starting a reducer requires a higher amount of power than during normal operation. Use the values given above for reference. Refer to the "Catalogue efficiency" and its calculation on page 18 for normal operation.

■ Moment of Inertia on Input Shaft (Solid Output Shaft / Hollow Output Shaft)

EWJ/EW Series

Moment of inertia on input shaft {GD^2} : × 10^{-3} kg·m^2 {× 10^{-3} kgf·m^2}

Size / Reduction ratio	EWJ25	EWJ35	EWJ42	EWJ50	EWJ63	EWJ70	EW80	EW100	EW125	EW150	EW175	EW200
10	0.005 {0.02}	0.01 {0.06}	0.02 {0.10}	0.17 {0.67}	0.38 {1.5}	0.64 {2.5}	0.8 {3.4}	2.1 {8.3}	4.6 {18.3}	9.2 {36.8}	16.7 {67.0}	29.1 {116.6}
15	0.005 {0.02}	0.01 {0.06}	0.02 {0.09}	0.16 {0.65}	0.36 {1.4}	0.61 {2.5}	0.8 {3.1}	1.9 {7.6}	4.1 {16.3}	8.1 {32.4}	14.4 {57.5}	24.4 {97.8}
20	0.005 {0.02}	0.01 {0.05}	0.02 {0.09}	0.15 {0.62}	0.34 {1.4}	0.57 {2.3}	0.7 {2.9}	1.8 {7.1}	3.5 {14.0}	6.7 {27.0}	11.5 {46.2}	21.5 {86.0}
25	0.005 {0.02}	0.01 {0.05}	0.02 {0.08}	0.15 {0.60}	0.33 {1.3}	0.55 {2.2}	0.7 {2.7}	1.7 {6.7}	3.3 {13.1}	6.0 {23.9}	10.2 {40.9}	19.8 {79.4}
30	0.005 {0.02}	0.01 {0.05}	0.02 {0.08}	0.16 {0.63}	0.35 {1.4}	0.60 {2.4}	0.7 {3.0}	1.8 {7.2}	3.8 {15.1}	7.4 {29.8}	13.0 {51.9}	21.6 {86.5}
40	0.005 {0.02}	0.01 {0.05}	0.02 {0.08}	0.15 {0.61}	0.34 {1.3}	0.57 {2.3}	0.7 {2.8}	1.7 {6.8}	3.3 {13.3}	6.4 {25.5}	10.7 {43.0}	19.9 {79.7}
50	0.005 {0.02}	0.01 {0.05}	0.02 {0.08}	0.15 {0.60}	0.33 {1.3}	0.55 {2.2}	0.7 {2.7}	1.6 {6.5}	3.2 {12.7}	5.7 {22.9}	9.8 {39.1}	19.0 {76.0}
60	0.004 {0.02}	0.01 {0.05}	0.02 {0.08}	0.15 {0.60}	0.32 {1.3}	0.54 {2.2}	0.6 {2.5}	1.5 {6.2}	3.1 {12.3}	5.6 {22.2}	9.1 {36.4}	18.6 {74.3}

■ Moment of Inertia on Input Shaft (Solid Output Shaft / Hollow Output Shaft)

EWJM(R)/EWM(R) Series

Moment of inertia on input shaft {GD²} : × 10^{-3} kg·m² {× 10^{-3} kgf·m²}

Size / Reduction ratio	EWJM42		EWJM50		EWJM63		EWJM70		EWM80		EWM100		EWM125		EWM150	
	Motor kW	Moment of inertia on input shaft	Motor kW	Moment of inertia on input shaft	Motor kW	Moment of inertia on input shaft	Motor kW	Moment of inertia on input shaft	Motor kW	Moment of inertia on input shaft	Motor kW	Moment of inertia on input shaft	Motor kW	Moment of inertia on input shaft	Motor kW	Moment of inertia on input shaft
10	0.75	2.3 {9.3}	0.75	2.4 {9.6}	1.5	6.9 {27.7}	2.2	9.9 {39.6}	3.7	21.3 {85.0}	5.5	40.4 {161.4}	—		—	
15	0.4	1.0 {4.2}	0.75	2.4 {9.6}	1.5	6.9 {27.6}	2.2	9.9 {39.54}	3.7	21.3 {85.0}	5.5	40.4 {161.4}	—		—	
20	0.4	1.0 {4.2}	0.75	2.4 {9.6}	1.5	6.9 {27.5}	2.2	9.8 {39.34}	3.7	21.3 {85.0}	5.5	40.1 {160.4}	—		—	
25	0.4	1.0 {4.2}	0.75	2.4 {9.6}	1.5	6.9 {27.5}	1.5	7.1 {28.4}	2.2	10.0 {40.0}	3.7	22.3 {89.0}	5.5	41.7 {166.6}	—	
30	0.4	1.0 {4.2}	0.75	2.4 {9.6}	1.5	6.9 {27.6}	1.5	7.2 {28.6}	2.2	10.0 {40.0}	3.7	22.3 {89.0}	5.5	42.2 {168.6}	—	
40	0.2	0.5 {2.0}	0.4	1.1 {4.5}	0.75	2.6 {10.3}	0.75	2.8 {11.2}	1.5	7.2 {28.8}	2.2	11.0 {44.04}	3.7	23.8 {95.0}	5.5	44.7 {178.6}
50	0.2	0.5 {2.0}	0.4	1.1 {4.5}	0.75	2.6 {10.2}	0.75	2.8 {11.1}	1.5	7.2 {28.8}	2.2	11.0 {44.04}	3.7	23.8 {95.0}	5.5	44.2 {176.6}
60	0.2	0.5 {2.0}	0.4	1.1 {4.5}	0.75	2.6 {10.2}	0.75	2.8 {11.1}	1.5	7.2 {28.8}	2.2	10.8 {43.04}	3.7	23.5 {94.0}	5.5	43.9 {175.6}

* For motors with brakes, add the moment of inertia and GD² listed in the Brake Characteristics table on page 222.

SWJ/SW Series

Moment of inertia on input shaft {GD²} : × 10^{-3} kg·m² {× 10^{-3} kgf·m²}

Size / Reduction ratio	SWJ25	SWJ35	SWJ42	SWJ50	SWJ63	SWJ70	SW80	SW100	SW125	SW150	SW175	SW200
10	0.005 {0.02}	0.02 {0.06}	0.03 {0.11}	0.09 {0.37}	0.38 {1.5}	0.33 {1.3}	0.8 {3.4}	2.1 {8.3}	4.6 {18.3}	9.2 {36.8}	16.7 {67.0}	29.1 {116.6}
15	0.005 {0.02}	0.01 {0.06}	0.02 {0.09}	0.09 {0.35}	0.36 {1.4}	0.30 {1.2}	0.8 {3.1}	1.9 {7.6}	4.1 {16.3}	8.1 {32.4}	14.4 {57.5}	24.4 {97.8}
20	0.005 {0.02}	0.01 {0.05}	0.02 {0.09}	0.08 {0.31}	0.34 {1.4}	0.29 {1.2}	0.7 {2.9}	1.8 {7.1}	3.5 {14.0}	6.7 {27.0}	11.5 {46.2}	21.5 {86.0}
25	0.005 {0.02}	0.01 {0.05}	0.02 {0.08}	0.08 {0.30}	0.33 {1.3}	0.26 {1.0}	0.7 {2.7}	1.7 {6.7}	3.3 {13.1}	6.0 {23.9}	10.2 {40.9}	19.8 {79.4}
30	0.005 {0.02}	0.01 {0.05}	0.02 {0.08}	0.08 {0.33}	0.35 {1.4}	0.28 {1.1}	0.7 {3.0}	1.8 {7.2}	3.8 {15.1}	7.4 {29.8}	13.0 {51.9}	21.6 {86.5}
40	0.005 {0.02}	0.01 {0.05}	0.02 {0.08}	0.08 {0.31}	0.34 {1.3}	0.29 {1.1}	0.7 {2.8}	1.7 {6.8}	3.3 {13.3}	6.4 {25.5}	10.7 {43.0}	19.9 {79.7}
50	0.005 {0.02}	0.01 {0.05}	0.02 {0.08}	0.07 {0.30}	0.33 {1.3}	0.25 {1.0}	0.7 {2.7}	1.6 {6.5}	3.2 {12.7}	5.7 {22.9}	9.8 {39.1}	19.0 {76.0}
60	0.004 {0.02}	0.01 {0.05}	0.02 {0.08}	0.07 {0.29}	0.32 {1.3}	0.23 {0.9}	0.6 {2.5}	1.5 {6.2}	3.1 {12.3}	5.6 {22.2}	9.1 {36.4}	18.6 {74.3}

SWJM(R)/SWM(R) Series

Moment of inertia on input shaft {GD²} : × 10^{-3} kg·m² {× 10^{-3} kgf·m²}

Size / Reduction ratio	SWJM35		SWJM42		SWJM50		SWJM63		SWJM70		SWM80		SWM100		SWM125		SWM150	
	Motor kW	Moment of inertia on input shaft	Motor kW	Moment of inertia on input shaft	Motor kW	Moment of inertia on input shaft	Motor kW	Moment of inertia on input shaft	Motor kW	Moment of inertia on input shaft	Motor kW	Moment of inertia on input shaft	Motor kW	Moment of inertia on input shaft	Motor kW	Moment of inertia on input shaft	Motor kW	Moment of inertia on input shaft
10	0.2	0.5 {1.9}	0.4	1.1 {4.2}	0.75	2.6 {16.5}	1.5	7.2 {28.9}	2.2	10.4 {41.6}	3.7	21.3 {85.0}	5.5	40.4 {161.6}	—		—	
15	0.2	0.5 {1.9}	0.4	1.0 {4.2}	0.75	2.6 {16.5}	1.5	4.5 {28.9}	1.5	7.1 {28.6}	3.7	21.3 {85.0}	5.5	40.4 {161.6}	—		—	
20	0.2	0.5 {1.9}	0.4	1.0 {4.2}	0.4	1.3 {5.3}	0.75	2.9 {11.6}	1.5	7.1 {28.6}	3.7	21.3 {85.0}	5.5	40.2 {160.6}	—		—	
											2.2	10.0 {39.8}						
25	0.2	0.5 {1.9}	0.4	1.0 {4.2}	0.4	1.3 {5.3}	0.75	2.9 {11.5}	1.5	7.1 {28.4}	2.2	10.0 {40.0}	3.7	22.3 {89.0}	5.5	41.7 {166.6}	—	
30	—		0.2	0.5 {2.0}	0.4	1.3 {5.3}	0.75	2.9 {11.6}	0.75	2.8 {11.3}	2.2	10.0 {40.0}	3.7	22.3 {89.0}	5.5	42.2 {168.6}	—	
40	—		0.2	0.5 {2.0}	0.4	1.3 {5.3}	0.75	2.9 {11.5}	0.75	2.8 {11.3}	1.5	7.2 {28.8}	2.2	11.0 {44.0}	3.7	23.8 {95.0}	5.5	44.7 {178.6}
50	—		0.2	0.5 {2.0}	0.4	1.3 {5.3}	0.75	2.9 {11.5}	0.75	2.8 {11.2}	1.5	7.2 {28.8}	2.2	11.0 {44.0}	3.7	23.8 {95.0}	5.5	44.2 {176.6}
60	—		0.2	0.5 {2.0}	0.4	1.3 {5.3}	0.75	2.9 {11.5}	0.75	2.8 {11.1}	1.5	7.2 {28.8}	2.2	10.8 {43.0}	3.7	23.5 {94.0}	5.5	43.9 {175.6}

* For motors with brakes, add the moment of inertia and GD² listed in the Brake Characteristics table on page 222.

Structure

EWJ/EW Series

■ Reduction Ratio

Single	1/10	1/15	1/20	1/25	1/30	1/40	1/50	1/60

■ Center Distance

Size	25	35	42	50	63	70	80	100	125	150	175	200
Center distance	25 mm	35 mm	42 mm	50 mm	63 mm	70 mm	80 mm	100 mm	125 mm	150 mm	175 mm	200 mm

[EWJ25 to 42]

• Drawing for reference.

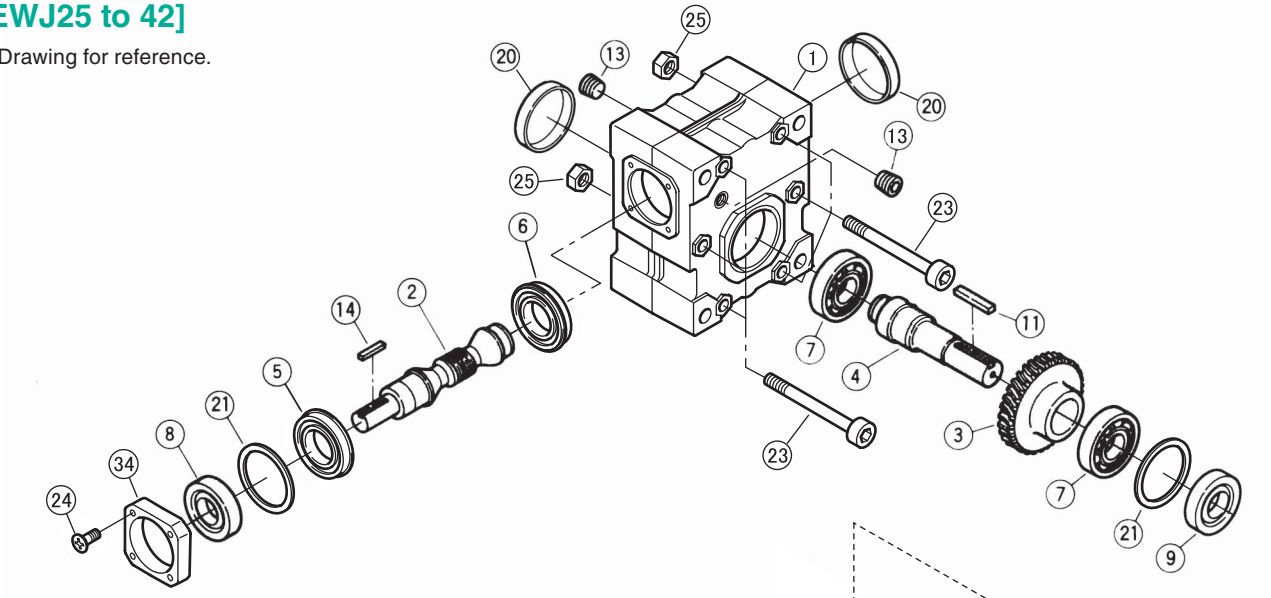

[EWJ50 to 70, EW80 to 200]

• Drawing for reference,
EWJ50 to 70 slightly differs.

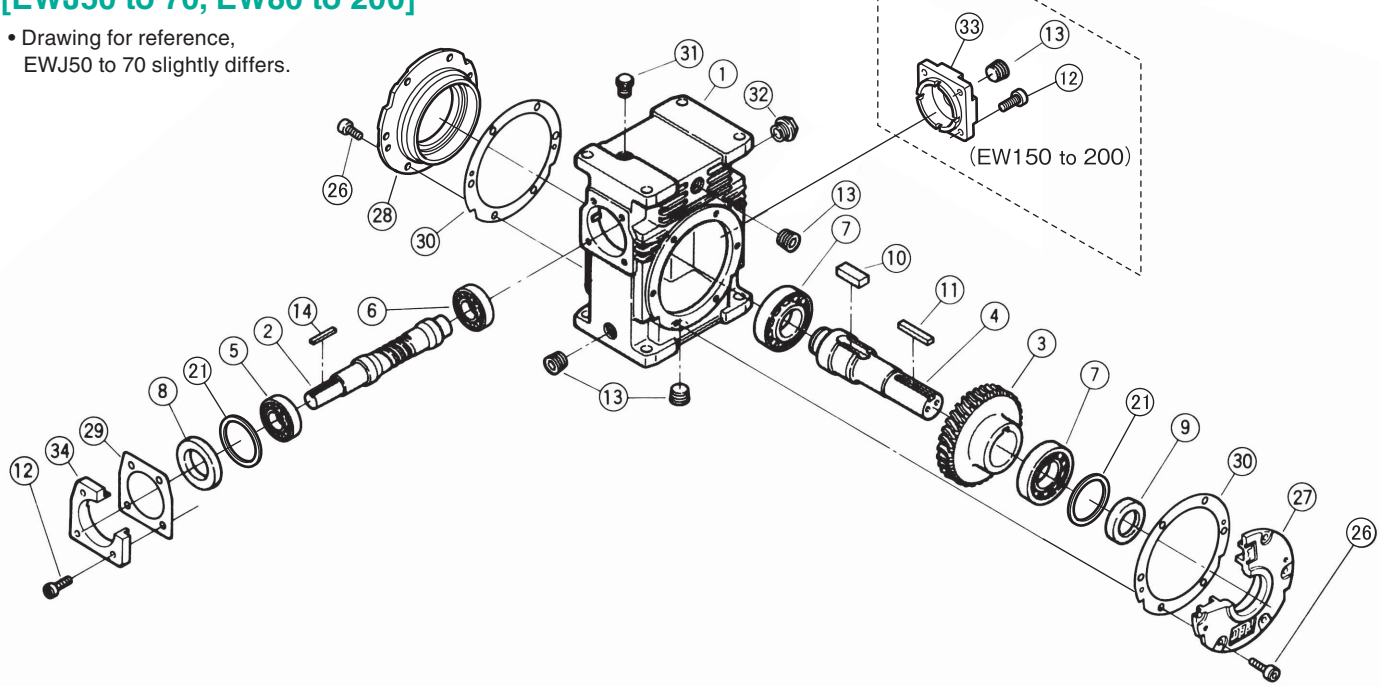

■ Part list

Refer to the part list on pages 256 to 257 for bearings and oilseals.

No.	Part	No.	Part	No.	Part	No.	Part	No.	Part	No.	Part
1	Case	6	Input shaft bearing B	11	Flat key square	20	Seal cap	25	Hex nut	30	Shim II
2	Worm	7	Output shaft bearing	12	Hex cap bolt	21	Filter set	26	Hex cap bolt	31	Pressure vent
3	Worm wheel	8	Input shaft oil seal	13	Plug with hole			27	Output bearing support I	32	Oil gauge
4	Output shaft	9	Output shaft oil seal	14	Flat key square	23	Hex cap bolt	28	Output bearing support II	33	Input cap
5	Input shaft bearing A	10	Flat key square			24	Cross-recessed countersunk flat head screw	29	Shim I	34	Input seal support

EWJM(R)/EWM(R) Series

■ Reduction Ratio

Single	1/10	1/15	1/20	1/25	1/30	1/40	1/50	1/60

■ Standard Motor

Size	42	50	63	70	80	100	125	150
Motor kW	0.2 to 0.75	0.4 to 0.75	0.75 to 1.5	0.75 to 2.2	1.5 to 3.7	2.2 to 5.5	3.7 to 5.5	5.5

■ Center Distance

Size	42	50	63	70	80	100	125	150
Center distance	42 mm	50 mm	63 mm	70 mm	80 mm	100 mm	125 mm	150 mm

[EWJM(R)42]

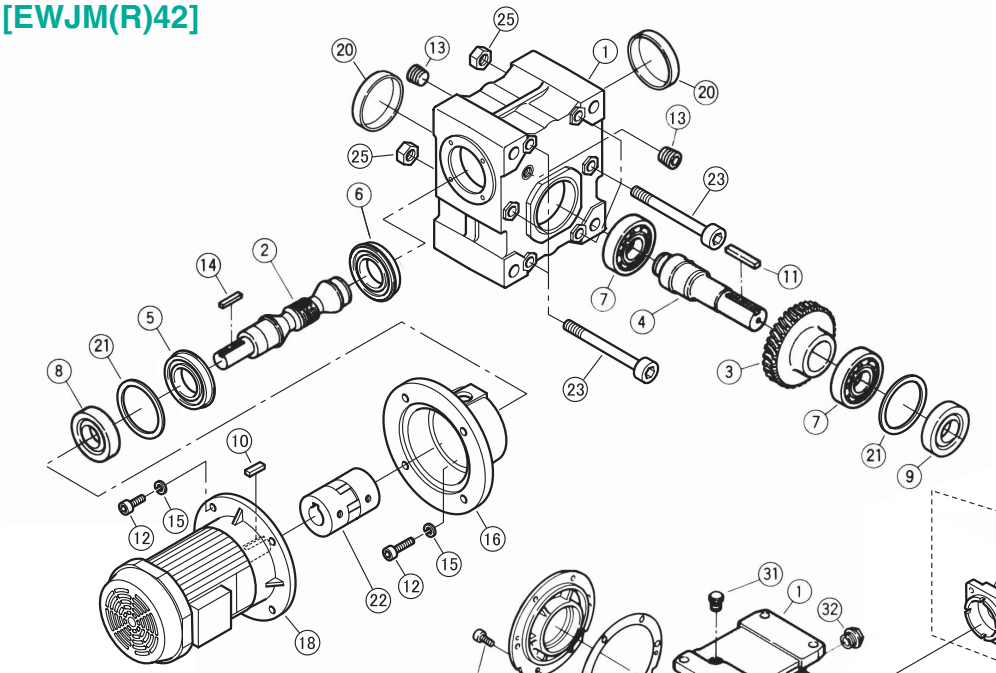

[EWJM(R)50 to 70, EWM(R)80 to 200]

- Drawing for reference, EWJM(R)50 to 70 slightly differs.

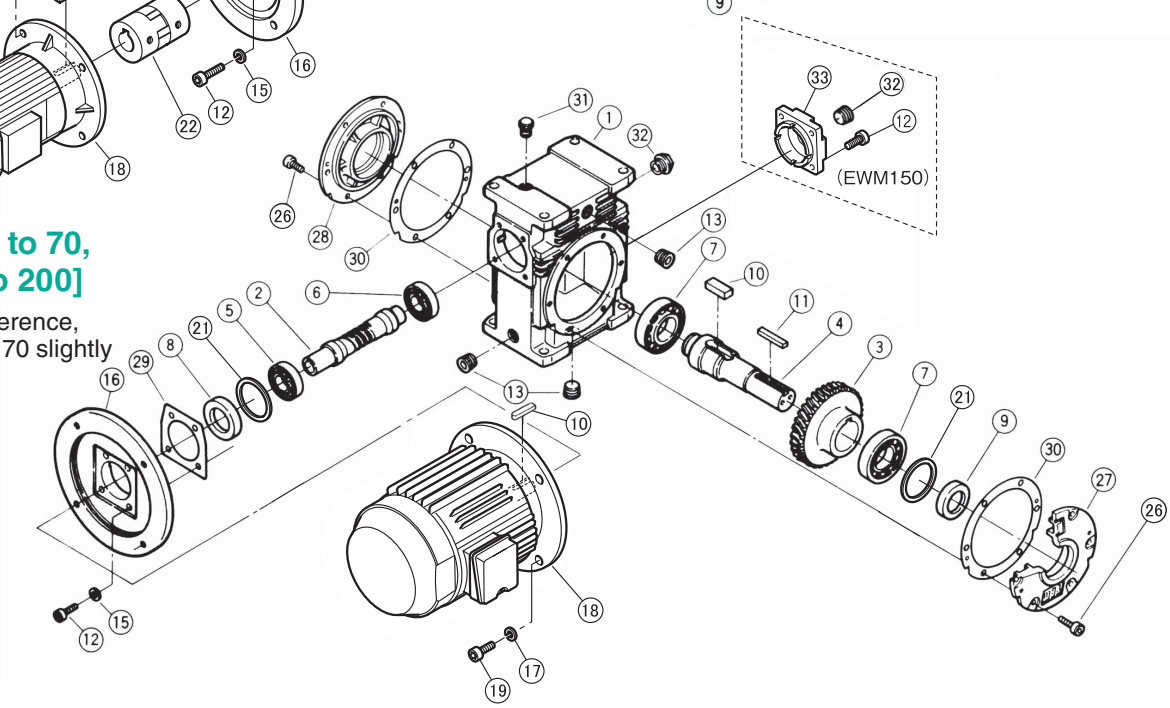

■ Part list

Refer to the part list on pages 256 to 257 for bearings and oilseals.

No.	Part	No.	Part	No.	Part	No.	Part	No.	Part	No.	Part
1	Case	7	Output shaft bearing	13	Plug with hole	19	Hex cap bolt	25	Hex nut	31	Pressure vent
2	Worm	8	Input shaft oil seal	14	Flat key square	20	Seal cap	26	Hex cap bolt	32	Oil gauge
3	Worm wheel	9	Output shaft oil seal	15	Spring washer	21	Filter set	27	Output bearing support I	33	Input cap
4	Output shaft	10	Flat key square	16	M Flange	22	coupling	28	Output bearing support II		
5	Input shaft bearing A	11	Flat key square	17	Spring washer	23	Hex cap bolt	29	Shim I		
6	Input shaft bearing B	12	Hex cap bolt	18	Motor			30	Shim II		

Structure

SWJ/SW Series

■ Reduction Ratio

Single	1/10	1/15	1/20	1/25	1/30	1/40	1/50	1/60

■ Center Distance

Size	25	35	42	50	63	70	80	100	125	150	175	200
Center distance	25 mm	35 mm	42 mm	50 mm	63 mm	70 mm	80 mm	100 mm	125 mm	150 mm	175 mm	200 mm

[SWJ25 to 42]

- Drawing for reference.

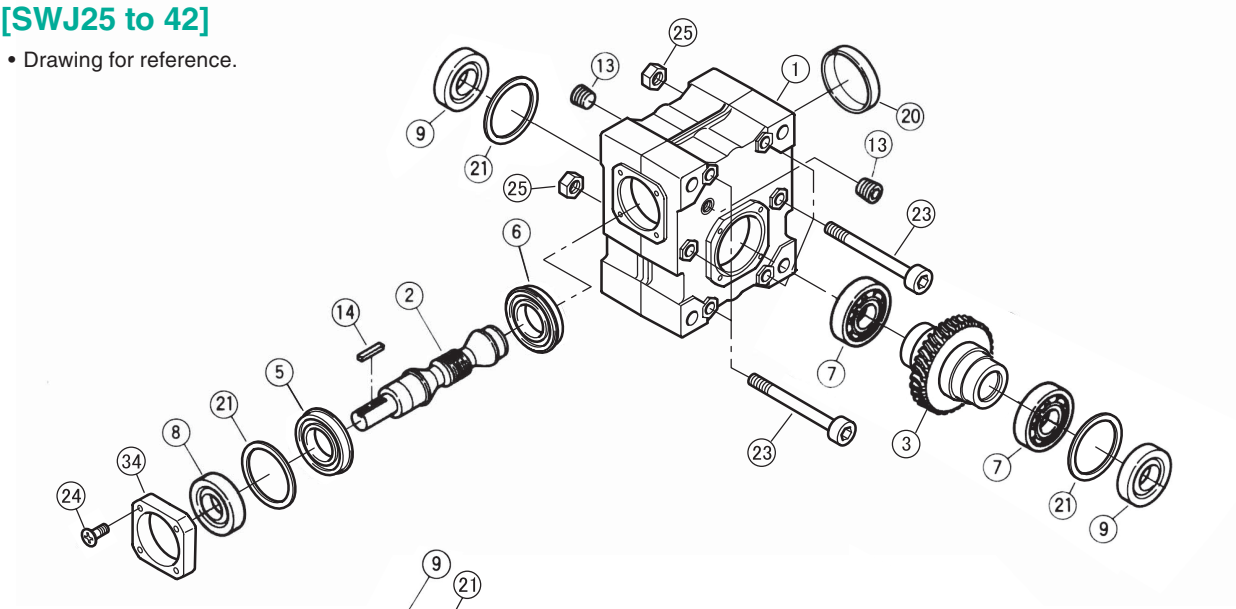

[SWJ50 to 70, SW80 to 200]

- Drawing for reference, SWJ50 and 63 slightly differs.

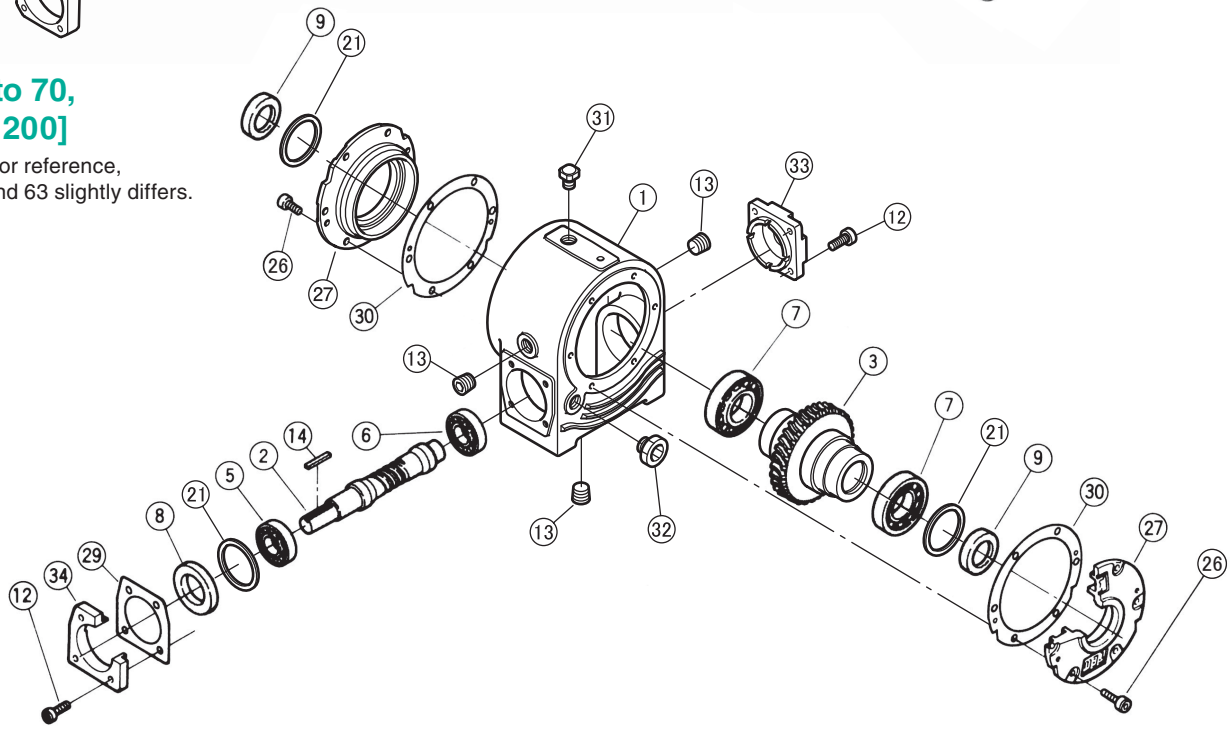

■ Part list

Refer to the part list on pages 256 to 257 for bearings and oilseals.

No.	Part	No.	Part	No.	Part	No.	Part	No.	Part	No.	Part
1	Case	6	Input shaft bearing B			20	Seal cap	25	Hex nut	30	Shim II
2	Worm	7	Output shaft bearing	12	Hex cap bolt	21	Filter set	26	Hex cap bolt	31	Pressure vent
3	Integral output shaft with worm wheel	8	Input shaft oil seal	13	Plug with hole			27	Output bearing support I	32	Oil gauge
		9	Output shaft oil seal	14	Flat key square	23	Hex cap bolt			33	Input cap
5	Input shaft bearing A					24	Cross-recessed countersunk flat head screw	29	Shim I	34	Input seal support

SWJM(R)/SWM(R) Series

■ Reduction Ratio

Single	1/10	1/15	1/20	1/25	1/30	1/40	1/50	1/60

■ Standard Motor

Size	35	42	50	63	70	80	100	125	150
Motor kW	0.2	0.2 to 0.4	0.4 to 0.75	0.75 to 1.5	0.75 to 2.2	1.5 to 3.7	2.2 to 5.5	3.7 to 5.5	5.5

■ Center Distance

Size	35	42	50	63	70	80	100	125	150
Center distance	35 mm	42 mm	50 mm	63 mm	70 mm	80 mm	100 mm	125 mm	150 mm

[SWJM35 to 42]

• Drawing for reference.

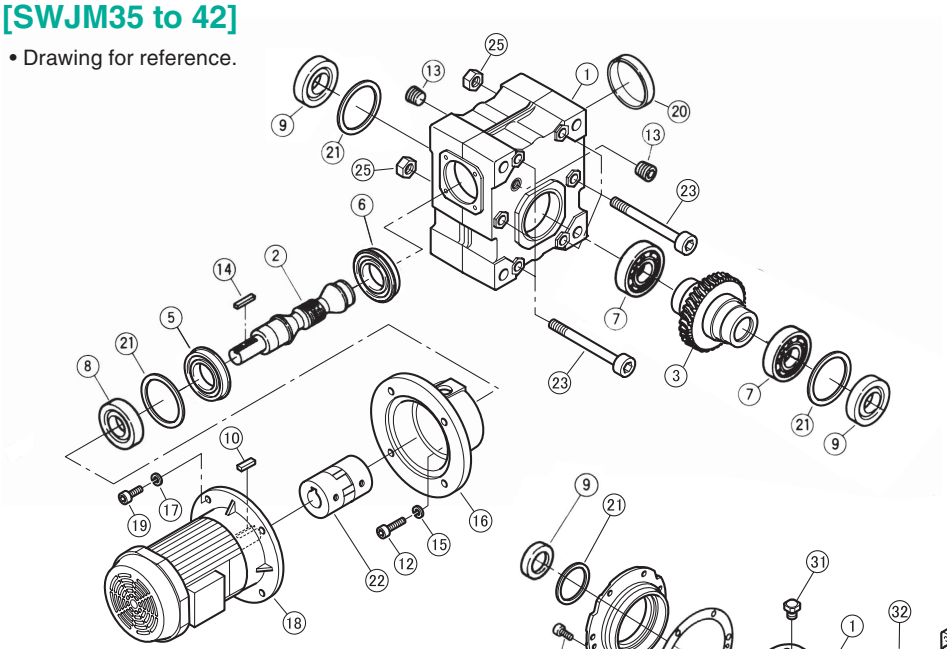

[SWJM(R)50 to 70, SWM(R)80 to 200]

• Drawing for reference,
SWJM(R)50 and 63 slightly differs.

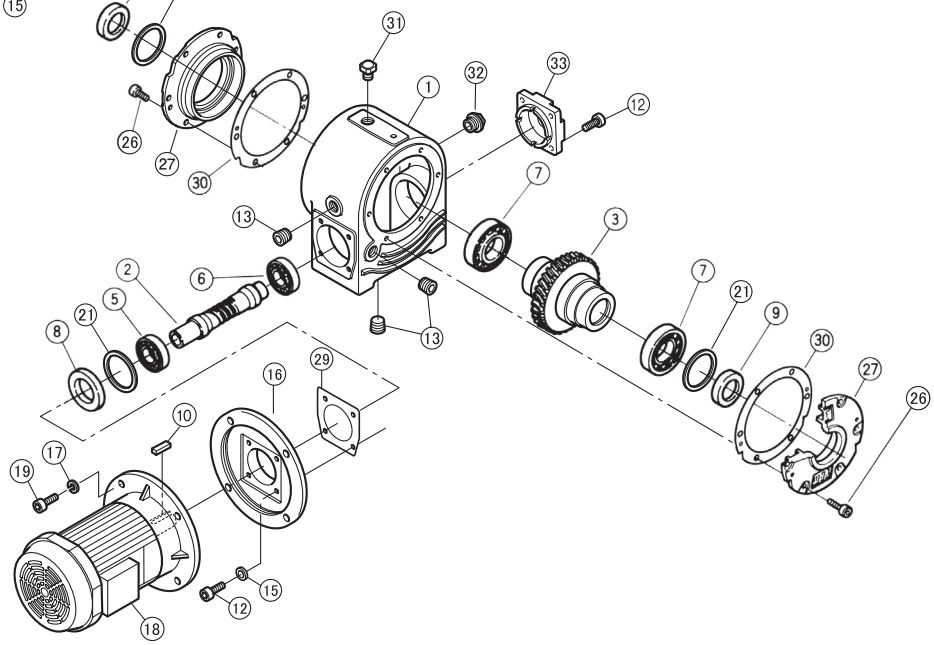

■ Part list

Refer to the part list on pages 256 to 257 for bearings and oilseals.

No.	Part	No.	Part	No.	Part	No.	Part	No.	Part	No.	Part
1	Case	7	Output shaft bearing	13	Plug with hole	19	Hex cap bolt	25	Hex nut	31	Pressure vent
2	Worm	8	Input shaft oil seal	14	Flat key square	20	Seal cap	26	Hex cap bolt	32	Oil gauge
3	Integral output shaft with worm wheel	9	Output shaft oil seal	15	Spring washer	21	Filter set	27	Output bearing support I	33	Input cap
		10	Flat key square	16	M Flange						
5	Input shaft bearing A	11	Flat key square	17	Spring washer	23	Hex cap bolt A	29	Shim I		
6	Input shaft bearing B	12	Hex cap bolt	18	Motor			30	Shim II		

Dimensional Drawings EWJ25E/SWJ25E

EWJ25E

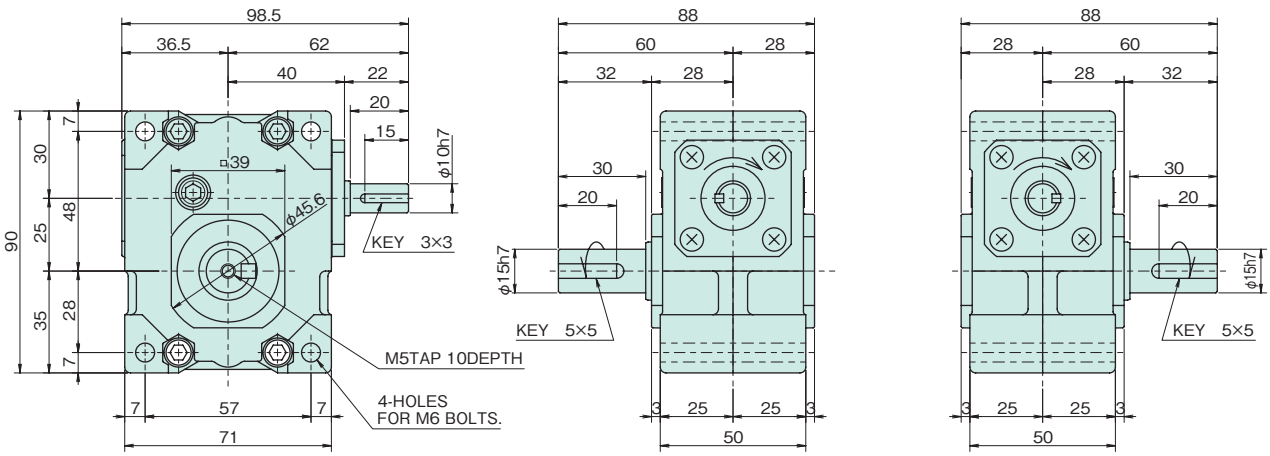

Estimated mass 1.1 kg

SWJ25E

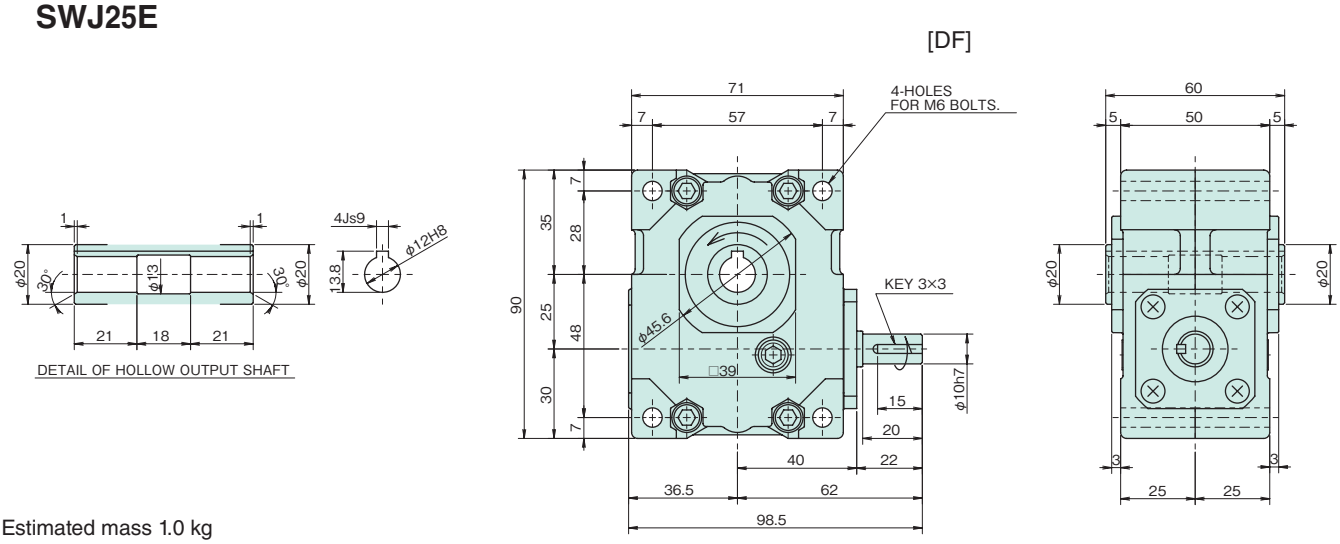

Estimated mass 1.0 kg

* Tsubaki offers optional mounting bolts and mounting feet. Refer to page 229.

* Refer to page 24 for shaft arrangements and relative direction of rotation.

Transfer Capacity Table

Size	Input / Reduction ratio	1750 r/min Input kW	1750 r/min Output torque N·m {kgf·m}	1450 r/min Input kW	1450 r/min Output torque N·m {kgf·m}	1150 r/min Input kW	1150 r/min Output torque N·m {kgf·m}	950 r/min Input kW	950 r/min Output torque N·m {kgf·m}	500 r/min Input kW	500 r/min Output torque N·m {kgf·m}	100 r/min Input kW	100 r/min Output torque N·m {kgf·m}
EWJ25 SWJ25	10	0.27	12.4{1.26}	0.24	13.3{1.36}	0.22	14.8{1.51}	0.18	14.9{1.52}	0.10	14.9{1.52}	0.021	14.9{1.52}
	15	0.20	12.9{1.31}	0.18	13.9{1.41}	0.16	14.9{1.52}	0.13	14.9{1.52}	0.07	14.9{1.52}	0.016	14.9{1.52}
	20	0.16	13.5{1.38}	0.15	14.5{1.48}	0.12	14.9{1.52}	0.10	14.9{1.52}	0.06	14.9{1.52}	0.013	14.9{1.52}
	25	0.14	13.9{1.42}	0.13	14.9{1.52}	0.10	14.9{1.52}	0.09	14.9{1.52}	0.05	14.9{1.52}	0.011	14.9{1.52}
	30	0.12	13.6{1.39}	0.11	14.7{1.50}	0.09	14.9{1.52}	0.08	14.9{1.52}	0.04	14.9{1.52}	0.010	14.9{1.52}
	40	0.10	13.9{1.42}	0.09	14.9{1.52}	0.08	14.9{1.52}	0.07	14.9{1.52}	0.04	14.9{1.52}	0.009	14.9{1.52}
	50	0.09	13.9{1.42}	0.08	14.4{1.47}	0.07	14.9{1.52}	0.06	14.9{1.52}	0.03	14.9{1.52}	0.008	14.9{1.52}
	60	0.07	13.0{1.33}	0.06	13.5{1.37}	0.06	13.9{1.42}	0.05	14.3{1.46}	0.03	14.3{1.46}	0.007	14.3{1.46}

When running a speed within the shaded boxes , and also continuously for more than one hour, refer to the thermal rating factor on page 17 to factor this into your selection.

Dimensional Drawings EWJ35E/SWJ35E/SWJM35E

EWJ35E

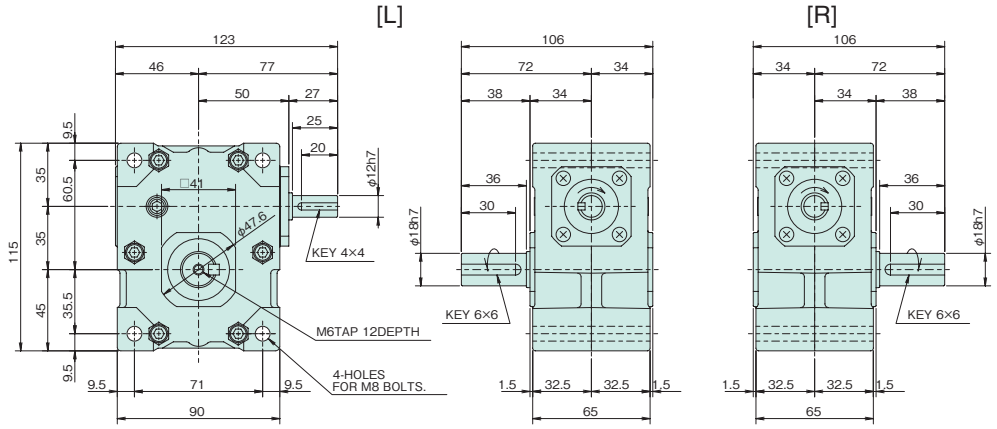

Estimated mass 1.9 kg

SWJ35E

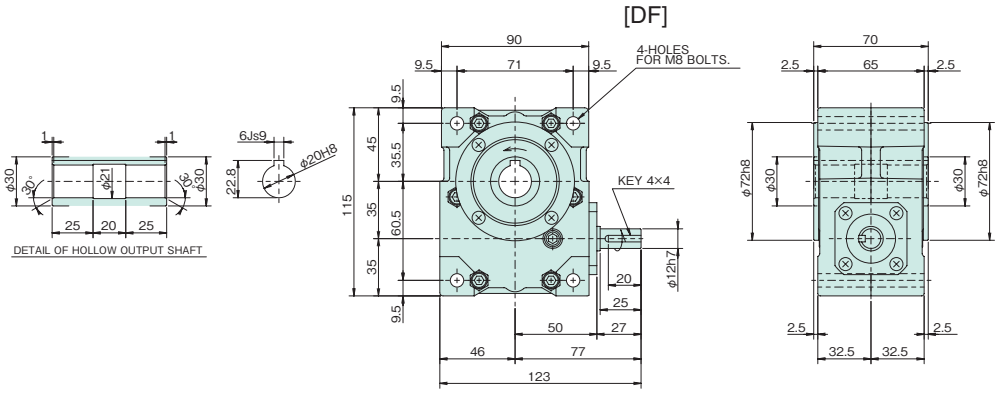

Estimated mass 1.9 kg

SWJM35E

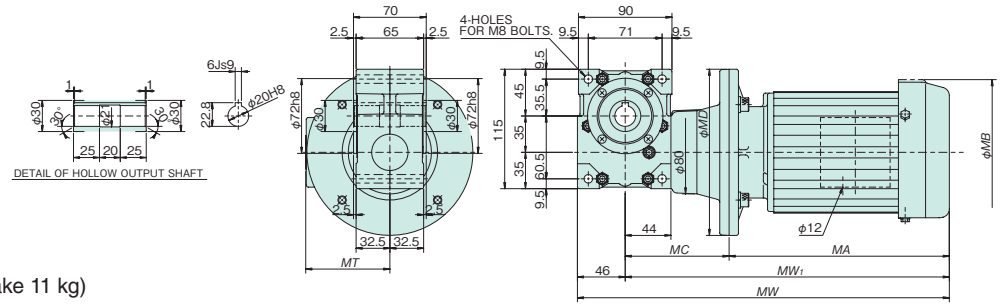

Estimated mass 9.1 kg (With brake 11 kg)

* Tsubaki offers optional mounting bolts and mounting feet. Refer to page 229.

* Refer to page 24 for shaft arrangements and relative direction of rotation.

Transfer Capacity Table

Size	Input Reduction ratio	1750 r/min Input kW	1750 r/min Output torque N·m {kgf·m}	1450 r/min Input kW	1450 r/min Output torque N·m {kgf·m}	1150 r/min Input kW	1150 r/min Output torque N·m {kgf·m}	950 r/min Input kW	950 r/min Output torque N·m {kgf·m}	500 r/min Input kW	500 r/min Output torque N·m {kgf·m}	100 r/min Input kW	100 r/min Output torque N·m {kgf·m}
EWJ35 SWJ35	10	0.59	27.6{2.81}	0.53	29.7{3.03}	0.49	33.8{3.45}	0.44	36.5{3.73}	0.24	37.3{3.81}	0.053	37.3{3.81}
	15	0.41	27.5{2.81}	0.37	29.7{3.03}	0.34	33.5{3.42}	0.32	37.7{3.85}	0.18	37.7{3.85}	0.039	37.7{3.85}
	20	0.33	27.8{2.84}	0.30	30.0{3.06}	0.27	33.7{3.44}	0.26	37.7{3.85}	0.14	37.7{3.85}	0.032	37.7{3.85}
	25	0.28	28.7{2.93}	0.26	31.0{3.16}	0.23	34.7{3.54}	0.21	37.7{3.85}	0.12	37.7{3.85}	0.027	37.7{3.85}
	30	0.25	29.3{2.99}	0.23	31.6{3.22}	0.21	35.3{3.60}	0.19	37.7{3.85}	0.11	37.7{3.85}	0.025	37.7{3.85}
	40	0.20	28.8{2.94}	0.19	31.1{3.18}	0.17	34.7{3.54}	0.16	37.7{3.85}	0.09	37.7{3.85}	0.022	37.7{3.85}
	50	0.18	29.6{3.02}	0.16	31.9{3.26}	0.15	35.5{3.63}	0.14	37.7{3.85}	0.08	37.7{3.85}	0.019	37.7{3.85}
	60	0.16	29.5{3.01}	0.15	31.8{3.25}	0.14	35.3{3.61}	0.12	37.0{3.78}	0.07	37.0{3.78}	0.018	37.0{3.78}

When running a speed within the shaded boxes , and also continuously for more than one hour, refer to the thermal rating factor on page 17 to factor this into your selection.

Size	Standard combination Motor kW	Reduction ratio	1750 r/min Output torque N·m {kgf·m}	1450 r/min Output torque N·m {kgf·m}	Values in ( ) for the motor indicates dimensions for a motor with a brake. MA	MC	MW_1	MW	MB	MD	MT	Estimated mass kg
SWJM35	0.2	10	9.30 {0.95}	11.2 {1.14}	212 (229)	100 (100)	312 (329)	358 (375)	140 (140)	160 (160)	81 (104.5)	9.2 (11)
		15	13.4 {1.36}	15.9 {1.62}								
		20	16.9 {1.73}	20.1 {2.05}								
		25	20.4 {2.08}	24.2 {2.47}								

* Motor/reducer combinations shown are standard.
* Refer to page 17 for sizing. * Thermal rating factor is 1.0.

Dimensional Drawings EWJ42E/SWJ42E

See next page for reducers with motors

EWJ42E

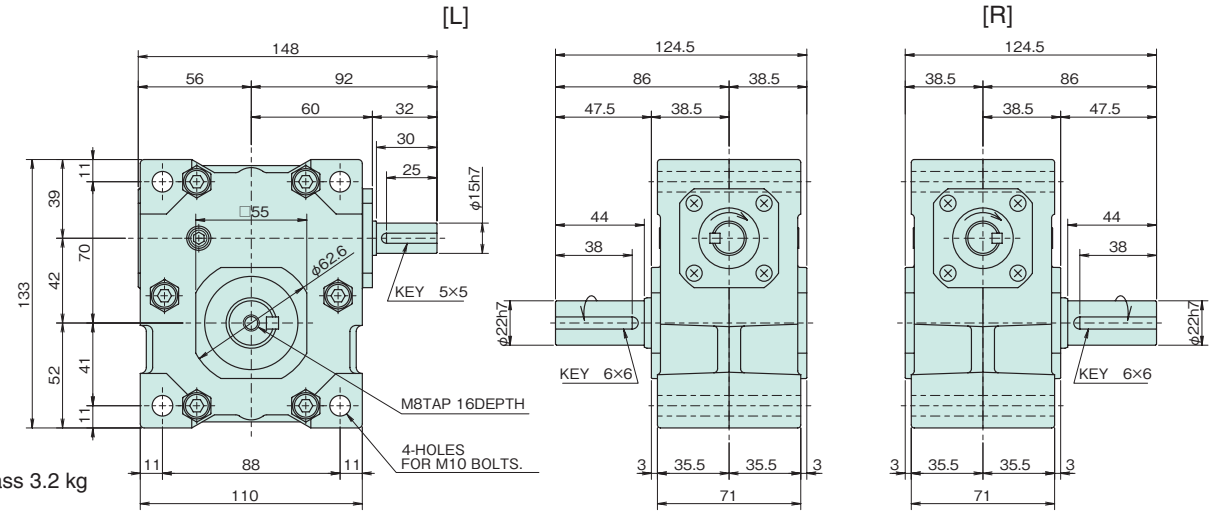

Estimated mass 3.2 kg

SWJ42E

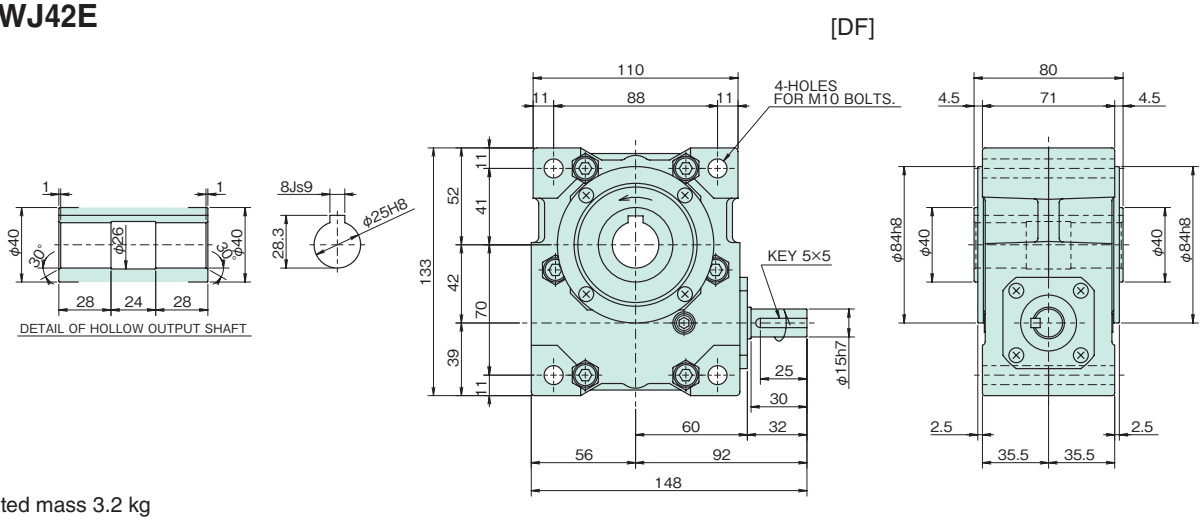

Estimated mass 3.2 kg

* Tsubaki offers optional mounting bolts and mounting feet. Refer to page 229.

* Refer to page 24 for shaft arrangements and relative direction of rotation.

Transfer Capacity Table

Size	Input	1750 r/min		1450 r/min		1150 r/min		950 r/min		500 r/min		100 r/min	
	Reduction ratio	Input kW	Output torque N·m {kgf·m}	Input kW	Output torque N·m {kgf·m}	Input kW	Output torque N·m {kgf·m}	Input kW	Output torque N·m {kgf·m}	Input kW	Output torque N·m {kgf·m}	Input kW	Output torque N·m {kgf·m}
EWJ42 SWJ42	10	0.87	41.1{4.20}	0.81	45.5{4.65}	0.73	51.3{5.23}	0.67	56.5{5.76}	0.45	68.8{7.02}	0.097	68.8{7.02}
	15	0.67	45.2{4.61}	0.61	48.8{4.98}	0.55	55.0{5.62}	0.50	59.5{6.07}	0.32	68.9{7.03}	0.070	68.9{7.03}
	20	0.54	46.3{4.73}	0.49	50.0{5.10}	0.45	56.1{5.73}	0.40	60.6{6.19}	0.26	69.0{7.04}	0.058	69.0{7.04}
	25	0.46	47.8{4.88}	0.42	51.6{5.27}	0.38	57.8{5.90}	0.35	62.5{6.38}	0.22	69.0{7.04}	0.049	69.0{7.04}
	30	0.40	47.3{4.83}	0.37	51.1{5.21}	0.33	57.0{5.82}	0.30	61.6{6.29}	0.19	69.0{7.04}	0.045	69.0{7.04}
	40	0.33	47.8{4.88}	0.30	51.6{5.27}	0.28	57.5{5.87}	0.25	62.1{6.34}	0.16	69.0{7.04}	0.039	69.0{7.04}
	50	0.29	49.1{5.01}	0.26	53.0{5.40}	0.24	58.9{6.01}	0.22	63.6{6.49}	0.14	69.0{7.04}	0.034	69.0{7.04}
	60	0.26	50.1{5.12}	0.24	54.1{5.52}	0.22	60.0{6.13}	0.20	63.2{6.45}	0.12	64.3{6.56}	0.029	64.3{6.56}

When running a speed within the shaded boxes , and also continuously for more than one hour, refer to the thermal rating factor on page 17 to factor this into your selection.

Dimensional Drawings EWJM(R)42E/SWJM42E

See previous page for reducers without motors

EWJM(R)42E

[R]

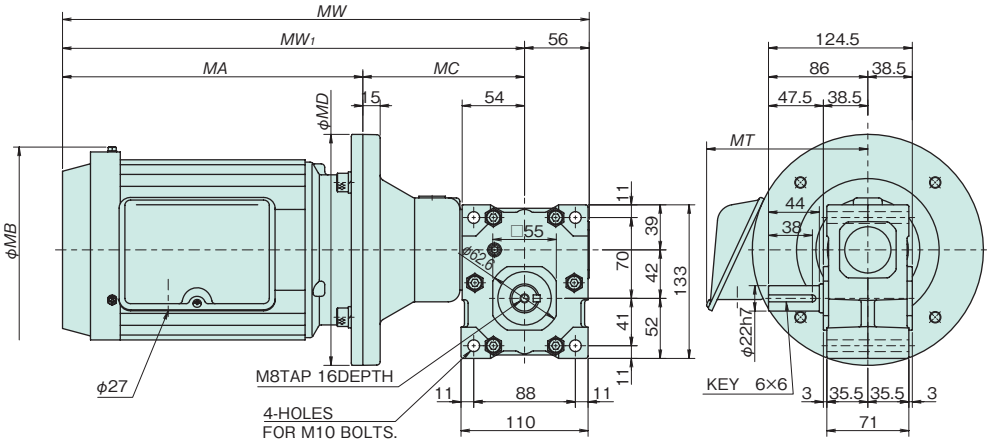

SWJM42E

[DF]

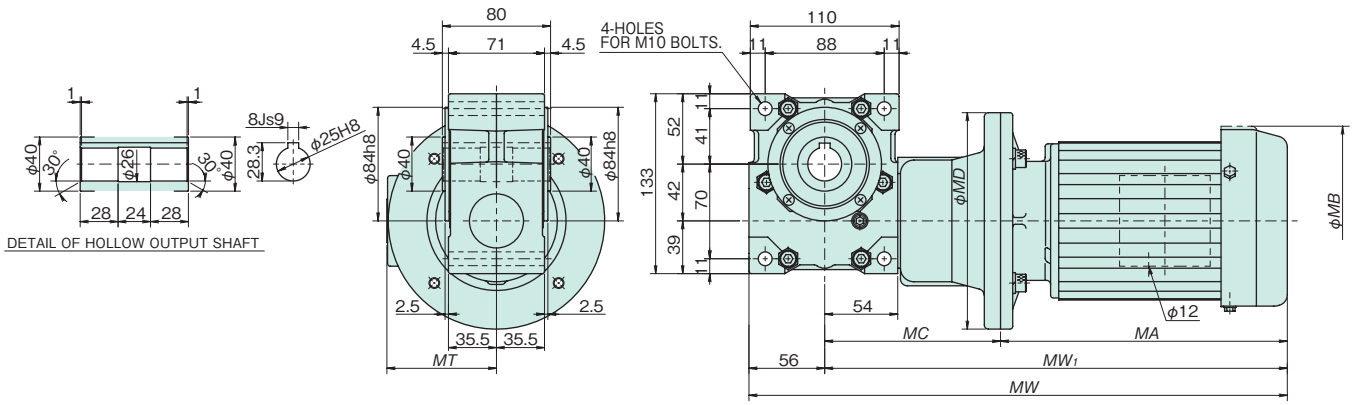

* Tsubaki offers optional mounting bolts and mounting feet. Refer to page 229.

* Refer to page 24 for shaft arrangements and relative direction of rotation.

Transfer Capacity Table

Size	Standard combination		1750 r/min	1450 r/min	Values in ( ) for the motor indicates dimensions for a motor with a brake.							
	Motor kW	Reduction ratio	Output torque N·m {kgf·m}	Output torque N·m {kgf·m}	MA	MC	MW_1	MW	MB	MD	MT	Estimated mass kg
EWJM42	0.2	40	29.0 {2.96}	34.1 {3.48}	212 (229)	130 (130)	342 (359)	398 (415)	140 (140)	160 (160)	81 (104.5)	11 (14)
		50	34.2 {3.49}	40.0 {4.08}								
		60	38.8 {3.96}	45.2 {4.62}								
	0.4	15	27.0 {2.76}	32.2 {3.29}	224 (241)	130 (130)	354 (371)	410 (427)	140 (140)	160 (160)	81 (104.5)	12 (15)
		20	34.4 {3.51}	40.8 {4.17}								
		25	41.5 {4.23}	49.2 {5.02}								
		30	47.3 {4.83}	51.1 {5.21}								
EWJMR42	0.75	10	35.3 {3.60}	42.4 {4.30}	260 (305)	140 (140)	400 (445)	456 (501)	178 (140)	200 (200)	140 (104.5)	20 (23)
SWJM42	0.2	30	23.7 {2.42}	28.0 {2.85}	212 (229)	130 (130)	342 (359)	398 (415)	140 (140)	160 (160)	81 (104.5)	11 (13)
		40	29.0 {2.96}	34.1 {3.48}								
		50	34.2 {3.49}	40.0 {4.08}								
		60	38.8 {3.96}	45.2 {4.62}								
	0.4	10	18.8 {1.92}	22.5 {2.29}	224 (241)	130 (130)	354 (371)	410 (427)	140 (140)	160 (160)	81 (104.5)	12 (15)
		15	27.0 {2.76}	32.2 {3.29}								
		20	34.4 {3.51}	40.8 {4.17}								
		25	41.5 {4.23}	49.2 {5.02}								

* Motor/reducer combinations shown are standard.
* Shaded boxes indicate the motor capacity exceeds the input kW of the reducer. Confirm output torque before using.
* Refer to page 17 for sizing. * Thermal rating factor is 1.0.

Dimensional Drawings EWJ50E/EWJ50V/SWJ50E

See next page for reducers with motors

EWJ50E

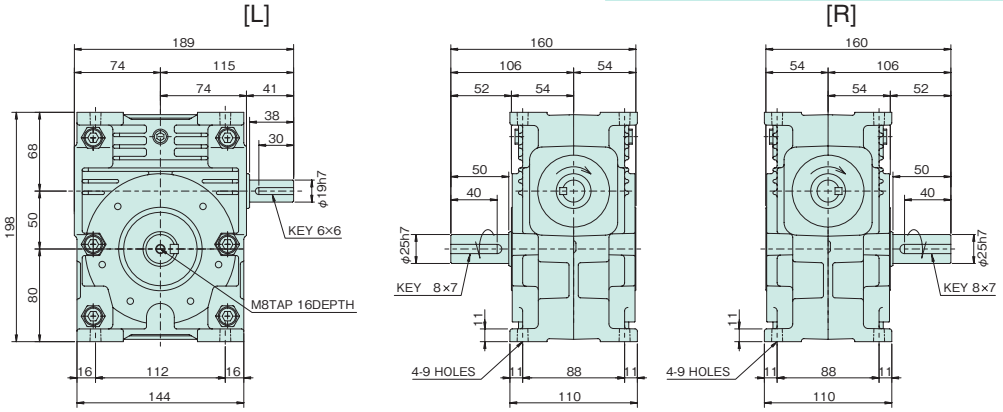

Estimated mass 7.0 kg

EWJ50V

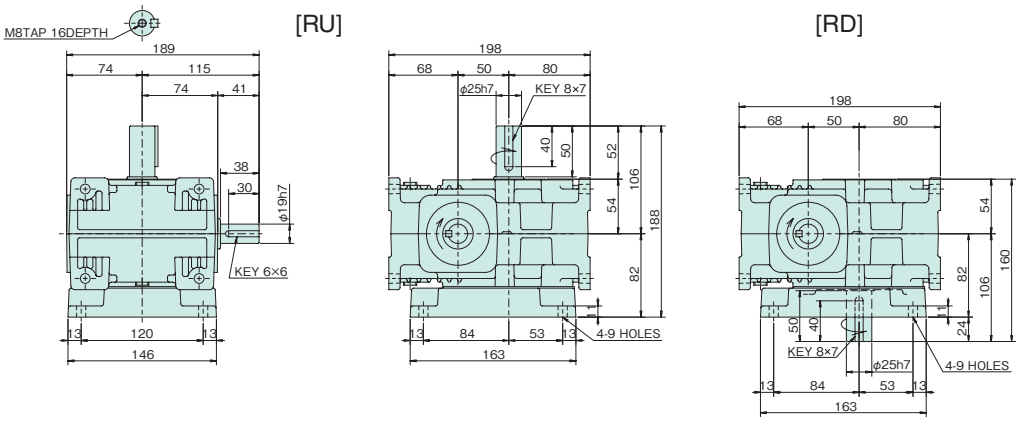

Estimated mass 7.6 kg

SWJ50E

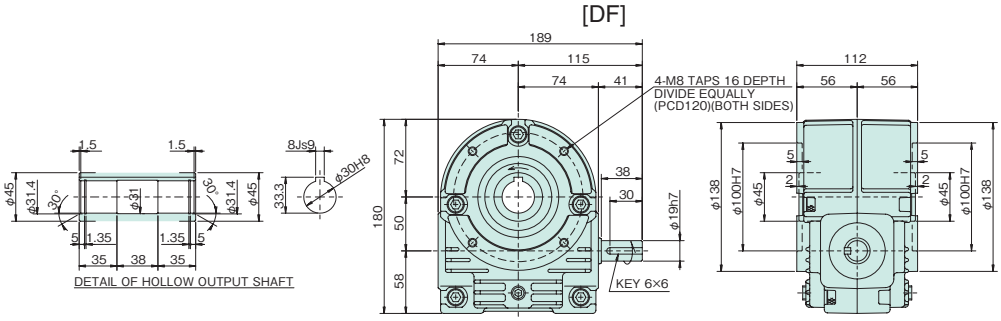

Estimated mass 11 kg

* Refer to page 24 for shaft arrangements and relative direction of rotation.

Transfer Capacity Table

Size	Input	1750 r/min		1450 r/min		1150 r/min		950 r/min		500 r/min		100 r/min	
	Reduction ratio	Input kW	Output torque N·m {kgf·m}	Input kW	Output torque N·m {kgf·m}	Input kW	Output torque N·m {kgf·m}	Input kW	Output torque N·m {kgf·m}	Input kW	Output torque N·m {kgf·m}	Input kW	Output torque N·m {kgf·m}
EWJ50	10	1.70	84 {8.6}	1.54	91 { 9.3}	1.34	99 {10.1}	1.20	106 {10.9}	0.67	109 {11.1}	0.14	109 {11.1}
	15	1.28	91 {9.3}	1.16	99 {10.1}	1.03	109 {11.1}	0.86	109 {11.1}	0.47	109 {11.1}	0.10	109 {11.1}
	20	1.02	94 {9.6}	0.92	101 {10.4}	0.80	109 {11.1}	0.67	109 {11.1}	0.37	109 {11.1}	0.08	109 {11.1}
	25	0.85	95 {9.7}	0.76	101 {10.3}	0.66	108 {11.1}	0.56	109 {11.1}	0.31	109 {11.1}	0.07	109 {11.1}
	30	0.75	95 {9.7}	0.68	103 {10.5}	0.59	109 {11.1}	0.50	109 {11.1}	0.28	109 {11.1}	0.07	109 {11.1}
	40	0.59	94 {9.6}	0.53	101 {10.3}	0.47	108 {11.1}	0.40	109 {11.1}	0.22	109 {11.1}	0.05	109 {11.1}
	50	0.48	91 {9.3}	0.43	98 {10.0}	0.38	104 {10.6}	0.34	109 {11.1}	0.19	109 {11.1}	0.05	109 {11.1}
	60	0.40	86 {8.8}	0.36	92 { 9.4}	0.32	98 {10.0}	0.28	103 {10.5}	0.17	106 {10.8}	0.04	106 {10.8}
SWJ50	10	1.56	77 {7.9}	1.40	83 { 8.5}	1.28	94 { 9.6}	1.15	102 {10.4}	0.67	109 {11.1}	0.14	109 {11.1}
	15	1.13	81 {8.2}	1.02	87 { 8.9}	0.89	94 { 9.6}	0.78	99 {10.1}	0.47	109 {11.1}	0.10	109 {11.1}
	20	0.91	84 {8.6}	0.82	91 { 9.2}	0.71	97 { 9.9}	0.63	102 {10.4}	0.37	109 {11.1}	0.08	109 {11.1}
	25	0.77	86 {8.8}	0.69	92 { 9.4}	0.58	96 { 9.8}	0.51	101 {10.3}	0.31	109 {11.1}	0.07	109 {11.1}
	30	0.65	83 {8.5}	0.60	90 { 9.2}	0.52	97 { 9.9}	0.46	102 {10.4}	0.28	109 {11.1}	0.06	109 {11.1}
	40	0.52	84 {8.5}	0.47	90 { 9.1}	0.41	96 { 9.8}	0.36	101 {10.3}	0.22	109 {11.1}	0.05	109 {11.1}
	50	0.42	81 {8.2}	0.38	86 { 8.8}	0.34	92 { 9.4}	0.30	97 { 9.9}	0.19	109 {11.1}	0.05	109 {11.1}
	60	0.37	80 {8.2}	0.34	86 { 8.7}	0.29	91 { 9.3}	0.26	95 { 9.7}	0.17	105 {10.7}	0.04	106 {10.8}

When running a speed within the shaded boxes , and also continuously for more than one hour, refer to the thermal rating factor on page 17 to factor this into your selection.

Dimensional Drawings EWJM(R)50E/EWJM(R)50V/SWJM(R)50E

See previous page for reducers without motors

EWJM(R)50E

[R]

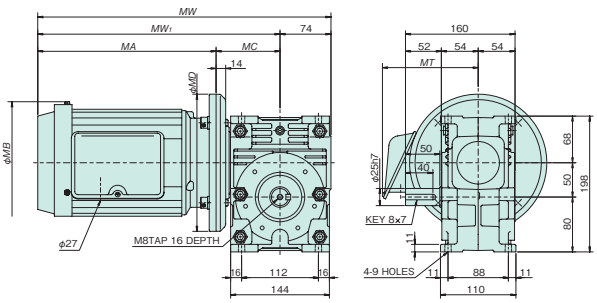

EWJM(R)50V

[LU]

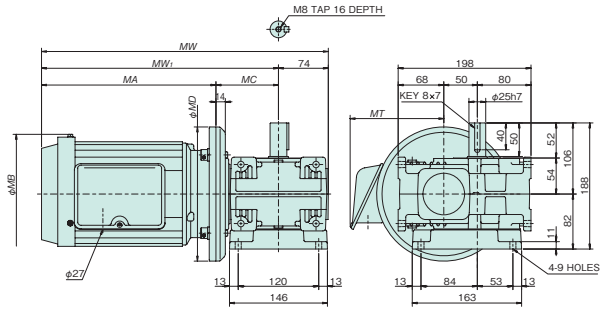

SWJM(R)50E

[DF]

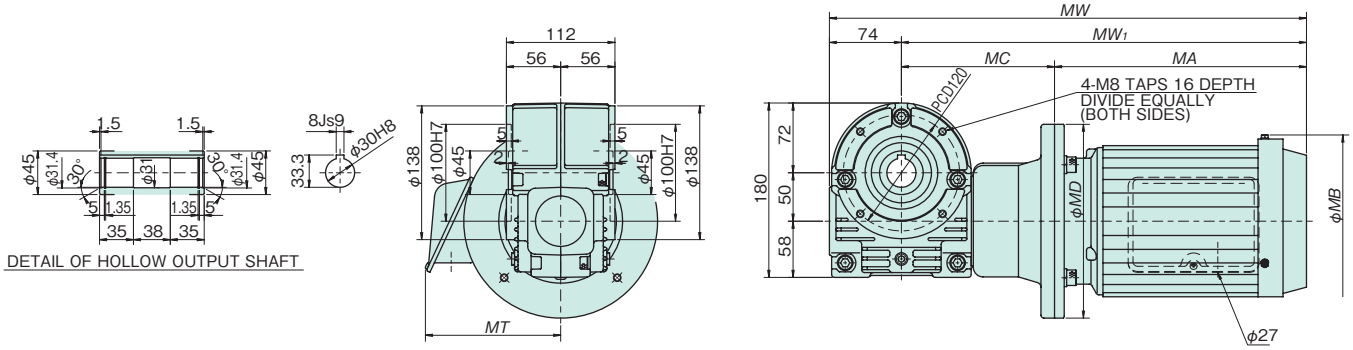

* Refer to page 24 for shaft arrangements and relative direction of rotation.

Transfer Capacity Table

Size	Standard combination		1750 r/min	1450 r/min	Values in ( ) for the motor indicates dimensions for a motor with a brake.								
	Motor kW	Reduction ratio	Output torque N·m {kgf·m}	Output torque N·m {kgf·m}	MA	MC	MW_1	MW	MB	MD	MT	E type Estimated mass kg	V type Estimated mass kg
EWJM50	0.4	40	65 {6.6}	76 { 7.8}	224 (241)	91 (91)	315 (332)	389 (406)	140 (140)	160 (160)	81 (104.5)	15 (17)	15 (18)
		50	76 {7.8}	90 { 9.2}									
		60	86 {8.8}	92 { 9.4}									
EWJMR50	0.75	10	37 {3.8}	44 { 4.5}	260 (305)	93 (93)	353 (398)	427 (472)	178 (178)	200 (200)	140 (140.0)	21 (24)	22 (25)
		15	53 {5.5}	64 { 6.5}									
		20	69 {7.1}	83 { 8.4}									
		25	84 {8.6}	100 {10.2}									
		30	95 {9.7}	103 {10.5}									
SWJM50	0.4	20	37 {3.8}	44 { 4.5}	224 (241)	148 (148)	372 (389)	446 (463)	140 (140)	160 (160)	81 (104.5)	21 (24)	–
		25	45 {4.6}	53 { 5.4}									
		30	51 {5.2}	60 { 6.1}									
		40	65 {6.6}	76 { 7.8}									
		50	76 {7.8}	86 { 8.8}									
		60	80 {8.2}	86 { 8.8}									
SWJMR50	0.75	10	37 {3.8}	44 { 4.5}	260 (305)	158 (158)	418 (463)	492 (537)	178 (178)	200 (200)	140 (140.0)	27 (30)	–
		15	53 {5.5}	64 { 6.5}									

* Motor/reducer combinations shown are standard.
* Shaded boxes indicate the motor capacity exceeds the input kW of the reducer. Confirm output torque before using.
* Refer to page 17 for sizing. * Thermal rating factor is 1.0.

Dimensional Drawings EWJ63E/EWJ63V/SWJ63E

See next page for reducers with motors

EWJ63E

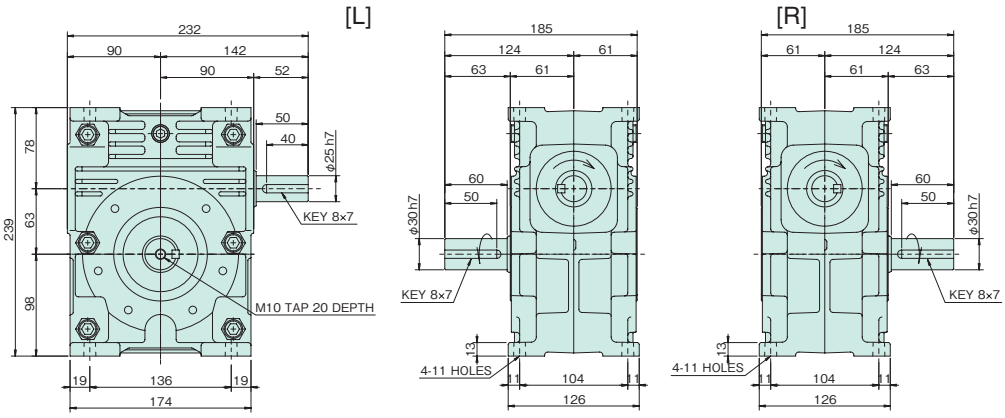

Estimated mass 11 kg

EWJ63V

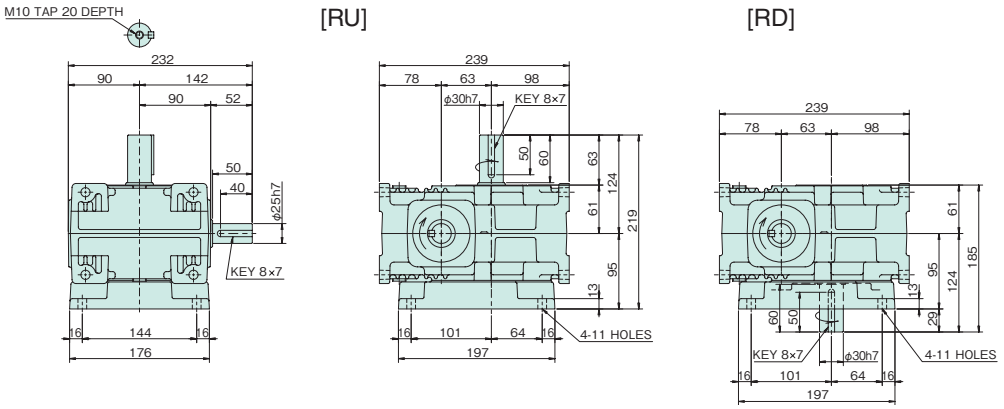

Estimated mass 12 kg

SWJ63E

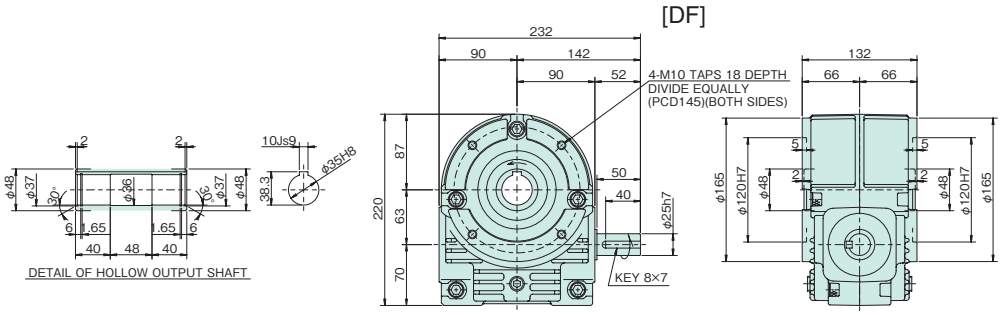

Estimated mass 16 kg

* Refer to page 24 for shaft arrangements and relative direction of rotation.

Transfer Capacity Table

Size	Input	1750 r/min		1450 r/min		1150 r/min		950 r/min		500 r/min		100 r/min	
	Reduction ratio	Input kW	Output torque N·m {kgf·m}	Input kW	Output torque N·m {kgf·m}	Input kW	Output torque N·m {kgf·m}	Input kW	Output torque N·m {kgf·m}	Input kW	Output torque N·m {kgf·m}	Input kW	Output torque N·m {kgf·m}
EWJ63	10	3.22	161 {16.4}	2.98	178 {18.2}	2.65	197 {20.1}	2.36	211 {21.6}	1.36	224 {22.9}	0.29	224 {22.9}
	15	2.41	174 {17.7}	2.23	192 {19.6}	1.98	212 {21.6}	1.75	224 {22.9}	0.96	224 {22.9}	0.21	224 {22.9}
	20	1.91	179 {18.2}	1.76	196 {20.0}	1.56	215 {22.0}	1.36	224 {22.9}	0.75	224 {22.9}	0.17	224 {22.9}
	25	1.57	179 {18.3}	1.44	196 {20.0}	1.27	213 {21.7}	1.12	224 {22.9}	0.62	224 {22.9}	0.14	224 {22.9}
	30	1.38	180 {18.4}	1.29	198 {20.2}	1.15	218 {22.3}	1.00	224 {22.9}	0.56	224 {22.9}	0.13	224 {22.9}
	40	1.09	178 {18.2}	1.01	196 {20.0}	0.91	215 {21.9}	0.80	224 {22.9}	0.46	224 {22.9}	0.11	224 {22.9}
	50	0.88	173 {17.7}	0.81	188 {19.2}	0.73	205 {20.9}	0.65	217 {22.1}	0.39	224 {22.9}	0.09	224 {22.9}
	60	0.72	163 {16.7}	0.67	177 {18.1}	0.59	192 {19.6}	0.53	203 {20.7}	0.31	204 {20.8}	0.07	204 {20.8}
SWJ63	10	2.70	135 {13.7}	2.43	145 {14.8}	2.20	164 {16.8}	1.99	178 {18.1}	1.36	224 {22.9}	0.29	224 {22.9}
	15	1.95	140 {14.3}	1.76	152 {15.5}	1.59	170 {17.4}	1.44	184 {18.8}	0.96	224 {22.9}	0.21	224 {22.9}
	20	1.56	145 {14.8}	1.41	157 {16.0}	1.28	176 {17.9}	1.16	190 {19.4}	0.75	224 {22.9}	0.17	224 {22.9}
	25	1.32	151 {15.4}	1.20	163 {16.6}	1.08	182 {18.5}	0.99	197 {20.1}	0.62	224 {22.9}	0.14	224 {22.9}
	30	1.13	147 {15.0}	1.03	158 {16.2}	0.93	177 {18.0}	0.85	191 {19.5}	0.56	224 {22.9}	0.13	224 {22.9}
	40	0.92	150 {15.3}	0.84	163 {16.6}	0.76	181 {18.5}	0.70	196 {20.0}	0.46	224 {22.9}	0.11	224 {22.9}
	50	0.79	155 {15.8}	0.72	168 {17.1}	0.66	186 {19.0}	0.61	202 {20.6}	0.39	224 {22.9}	0.09	224 {22.9}
	60	0.70	158 {16.2}	0.64	171 {17.5}	0.59	190 {19.4}	0.52	200 {20.4}	0.31	204 {20.8}	0.07	204 {20.8}

When running a speed within the shaded boxes , and also continuously for more than one hour, refer to the thermal rating factor on page 17 to factor this into your selection.

Dimensional Drawings EWJMR63E/EWJMR63V/SWJMR63E

See previous page for reducers without motors

EWJMR63E

[R]

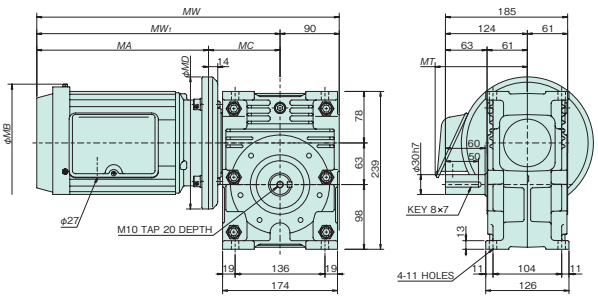

EWJMR63V

[LU]

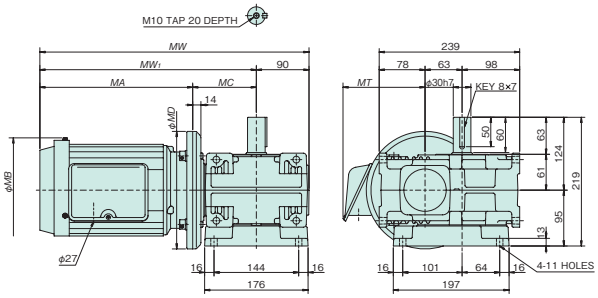

SWJMR63E

[DF]

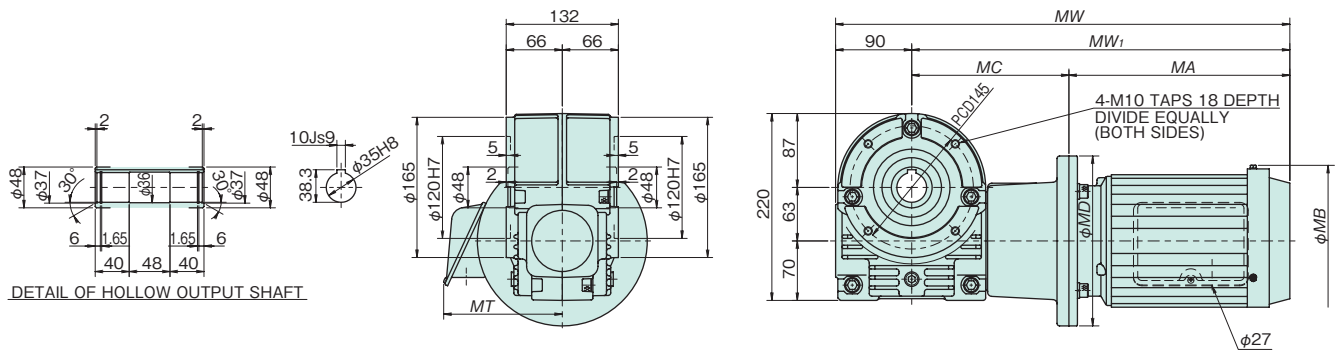

* Refer to page 24 for shaft arrangements and relative direction of rotation.

Transfer Capacity Table

Size	Standard combination		1750 r/min	1450 r/min	Values in ( ) for the motor indicates dimensions for a motor with a brake.								
	Motor kW	Reduction ratio	Output torque N·m {kgf·m}	Output torque N·m {kgf·m}	MA	MC	MW_1	MW	MB	MD	MT	E type Estimated mass kg	V type Estimated mass kg
EWJMR63	0.75	40	123 {12.6}	145 {14.8}	260 (305)	108 (108)	368 (413)	458 (503)	178 (178)	200 (200)	140 (140.0)	25 (28)	27 (30)
		50	147 {15.0}	174 {17.7}									
		60	163 {16.7}	177 {18.1}									
	1.5	10	75 { 7.6}	90 { 9.1}	296 (360)	108 (108)	404 (468)	494 (558)	204 (202)	200 (200)	158 (155.0)	35 (40)	36 (41)
		15	108 {11.0}	129 {13.2}									
		20	140 {14.3}	167 {17.0}									
		25	171 {17.4}	196 {20.0}									
		30	180 {18.4}	198 {20.2}									
SWJMR63	0.75	20	70 { 7.1}	83 { 8.5}	260 (305)	185 (185)	445 (490)	535 (580)	178 (178)	200 (200)	140 (140.0)	33 (36)	–
		25	85 { 8.7}	102 {10.4}									
		30	98 { 9.9}	115 {11.8}									
		40	123 {12.6}	145 {14.8}									
		50	147 {15.0}	168 {17.1}									
		60	158 {16.2}	171 {17.5}									
	1.5	10	75 { 7.6}	90 { 9.1}	296 (360)	185 (185)	481 (545)	571 (635)	204 (202)	200 (200)	158 (155.0)	43 (48)	–
		15	108 {11.0}	129 {13.2}									

* Motor/reducer combinations shown are standard.
* Shaded boxes indicate the motor capacity exceeds the input kW of the reducer. Confirm output torque before using.
* Refer to page 17 for sizing. * Thermal rating factor is 1.0.

Dimensional Drawings EWJ70E/EWJ70V/SWJ70E

See next page for reducers with motors

EWJ70E

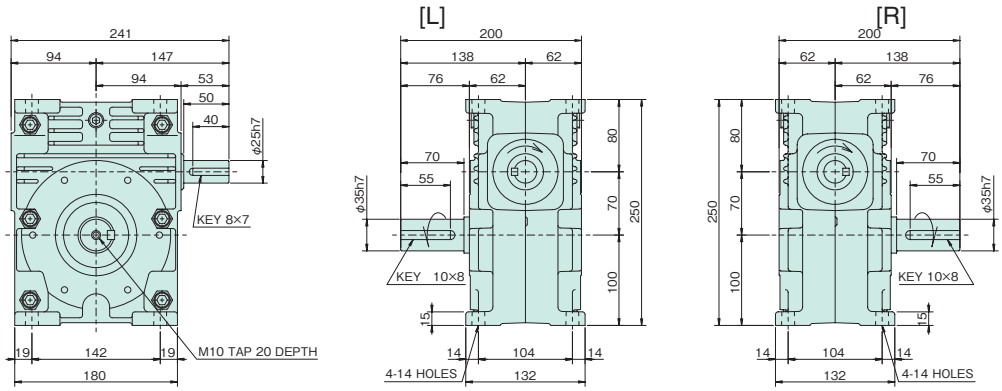

Estimated mass 13 kg

EWJ70V

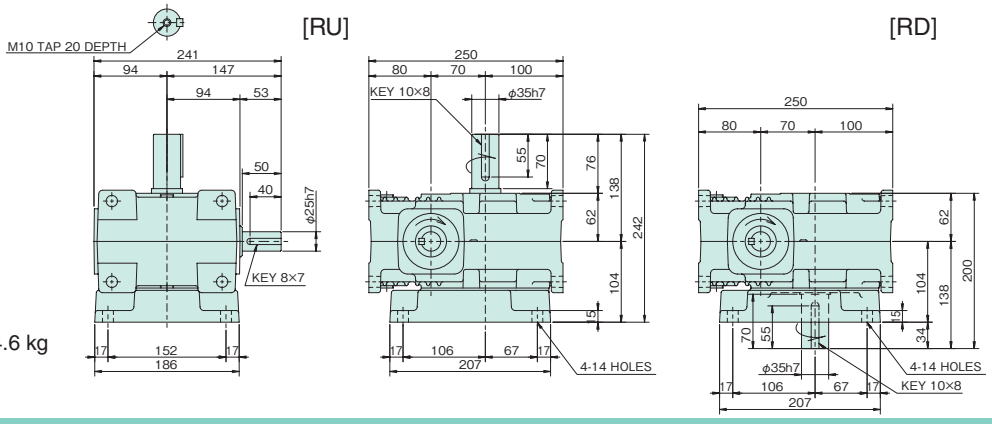

Estimated mass 14.6 kg

SWJ70E

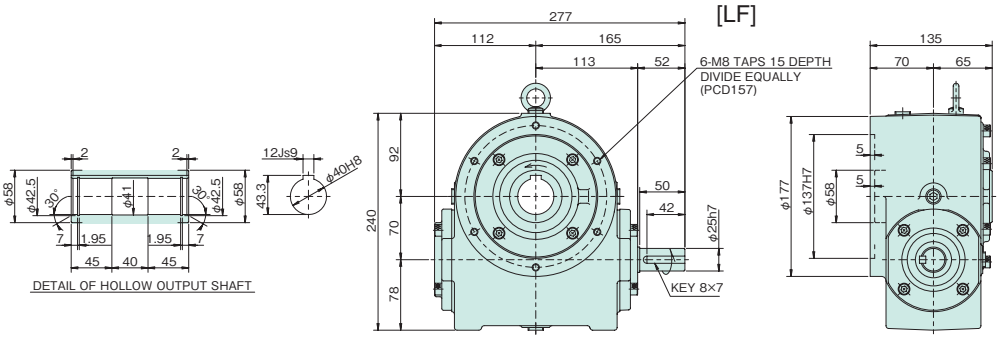

Estimated mass 21 kg

* Refer to page 24 for shaft arrangements and relative direction of rotation.

Transfer Capacity Table

Size	Input	1750 r/min		1450 r/min		1150 r/min		950 r/min		500 r/min		100 r/min	
	Reduction ratio	Input kW	Output torque N·m {kgf·m}	Input kW	Output torque N·m {kgf·m}	Input kW	Output torque N·m {kgf·m}	Input kW	Output torque N·m {kgf·m}	Input kW	Output torque N·m {kgf·m}	Input kW	Output torque N·m {kgf·m}
EWJ70	10	4.28	214 {21.9}	3.85	231 {23.6}	3.51	263 {26.8}	3.16	284 {29.0}	1.96	324 {33.1}	0.42	324 {33.1}
	15	3.09	225 {22.9}	2.80	242 {24.7}	2.54	273 {27.9}	2.29	295 {30.1}	1.38	324 {33.1}	0.30	324 {33.1}
	20	2.50	235 {24.0}	2.26	254 {25.9}	2.05	285 {29.1}	1.86	309 {31.5}	1.08	324 {33.1}	0.24	324 {33.1}
	25	2.12	243 {24.8}	1.92	263 {26.8}	1.74	294 {30.0}	1.56	314 {32.0}	0.89	324 {33.1}	0.20	324 {33.1}
	30	1.80	236 {24.0}	1.64	255 {26.0}	1.49	284 {29.0}	1.36	308 {31.4}	0.81	324 {33.1}	0.19	324 {33.1}
	40	1.45	241 {24.6}	1.35	265 {27.0}	1.22	295 {30.1}	1.11	315 {32.2}	0.65	324 {33.1}	0.15	324 {33.1}
	50	1.18	235 {23.9}	1.10	258 {26.3}	0.99	283 {28.9}	0.89	302 {30.8}	0.55	324 {33.1}	0.13	324 {33.1}
	60	0.97	222 {22.7}	0.90	243 {24.8}	0.81	266 {27.1}	0.73	282 {28.8}	0.46	311 {31.7}	0.11	311 {31.8}
SWJ70	10	3.14	157 {16.0}	2.94	176 {18.0}	2.62	196 {20.0}	2.35	211 {21.6}	1.62	268 {27.4}	0.39	300 {30.6}
	15	2.43	176 {18.0}	2.27	197 {20.1}	1.95	210 {21.5}	1.76	227 {23.1}	1.18	276 {28.1}	0.30	317 {32.3}
	20	2.03	191 {19.5}	1.94	217 {22.2}	1.63	227 {23.1}	1.48	245 {25.0}	0.92	277 {28.2}	0.23	310 {31.6}
	25	1.71	196 {20.0}	1.56	213 {21.7}	1.38	233 {23.8}	1.25	252 {25.7}	0.72	263 {26.8}	0.19	301 {30.7}
	30	1.45	190 {19.4}	1.36	212 {21.6}	1.24	236 {24.1}	1.12	254 {25.9}	0.71	283 {28.9}	0.18	317 {32.3}
	40	1.20	200 {20.4}	1.13	222 {22.7}	1.00	242 {24.7}	0.91	259 {26.4}	0.58	292 {29.8}	0.15	316 {32.2}
	50	0.97	194 {19.8}	0.91	214 {21.8}	0.81	233 {23.7}	0.73	248 {25.3}	0.46	273 {27.9}	0.12	294 {30.0}
	60	0.80	184 {18.8}	0.75	201 {20.6}	0.66	218 {22.3}	0.60	232 {23.6}	0.38	253 {25.9}	0.10	276 {28.2}

When running a speed within the shaded boxes , and also continuously for more than one hour, refer to the thermal rating factor on page 17 to factor this into your selection.

Dimensional Drawings EWJMR70E/EWJMR70V/SWJMR70E

See previous page for reducers without motors

EWJMR70E

[R]

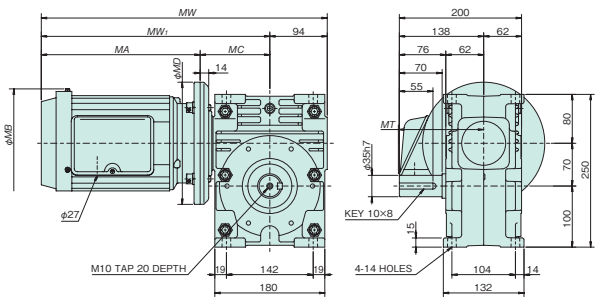

EWJMR70V

[LU]

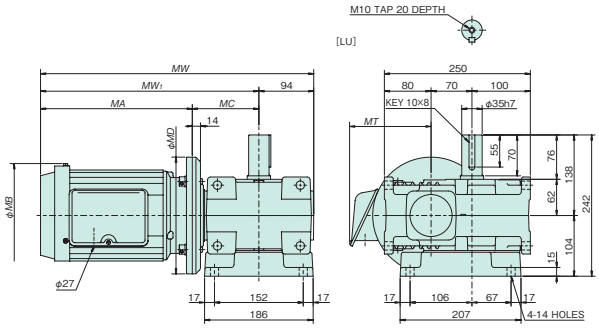

SWJMR70E

[LF]

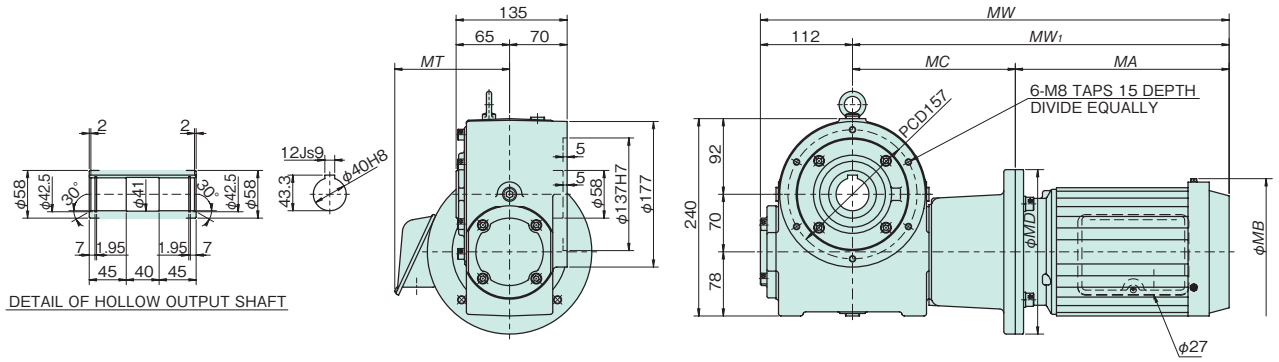

* Refer to page 24 for shaft arrangements and relative direction of rotation.

Transfer Capacity Table

Size	Standard combination		1750 r/min	1450 r/min	Values in ( ) for the motor indicates dimensions for a motor with a brake.								
	Motor kW	Reduction ratio	Output torque N·m {kgf·m}	Output torque N·m {kgf·m}	MA	MC	MW1	MW	MB	MD	MT	E type Estimated mass kg	V type Estimated mass kg
EWJMR70	0.75	40	125 {12.7}	148 {15.1}	260 (305)	114 (114)	374 (419)	468 (513)	178 (178)	200 (200)	140 (140.0)	28 (31)	29 (32)
		50	150 {15.3}	176 {18.0}									
		60	172 {17.6}	203 {20.7}									
	1.5	25	172 {17.6}	205 {20.9}	296 (360)	114 (114)	410 (474)	504 (568)	204 (178)	200 (200)	158 (140.0)	37 (42)	39 (44)
		30	197 {20.1}	233 {23.8}									
	2.2	10	110 {11.2}	132 {13.5}	318 (374)	114 (114)	432 (488)	526 (582)	218 (226)	250 (250)	169 (166.0)	48 (53)	50 (55)
		15	160 {16.3}	191 {19.4}									
		20	207 {21.1}	247 {25.2}									
SWJMR70	0.75	30	98 {10.0}	116 {11.9}	260 (305)	198 (198)	458 (503)	570 (615)	178 (178)	200 (200)	140 (140.0)	41 (44)	–
		40	125 {12.7}	148 {15.1}									
		50	150 {15.3}	176 {18.0}									
		60	172 {17.6}	201 {20.6}									
	1.5	15	109 {11.1}	130 {13.3}	296 (360)	198 (198)	494 (558)	606 (670)	204 (202)	200 (200)	158 (155.0)	51 (56)	–
		20	141 {14.4}	168 {17.2}									
		25	172 {17.6}	205 {20.9}									
	2.2	10	110 {11.2}	132 {13.5}	318 (374)	222 (222)	540 (596)	652 (708)	218 (226)	250 (250)	169 (166.0)	61 (66)	–

* Motor/reducer combinations shown are standard.
* Shaded boxes indicate the motor capacity exceeds the input kW of the reducer. Confirm output torque before using.
* Refer to page 17 for sizing. * Thermal rating factor is 1.0.

Dimensional Drawings EW80T/EW80B/EW80V

EW80T

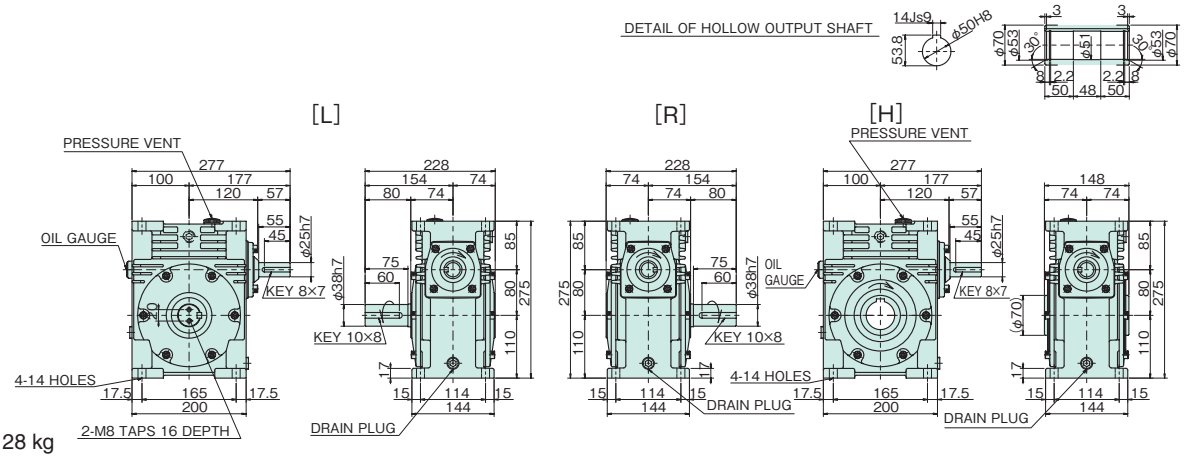

Estimated mass 28 kg

EW80B

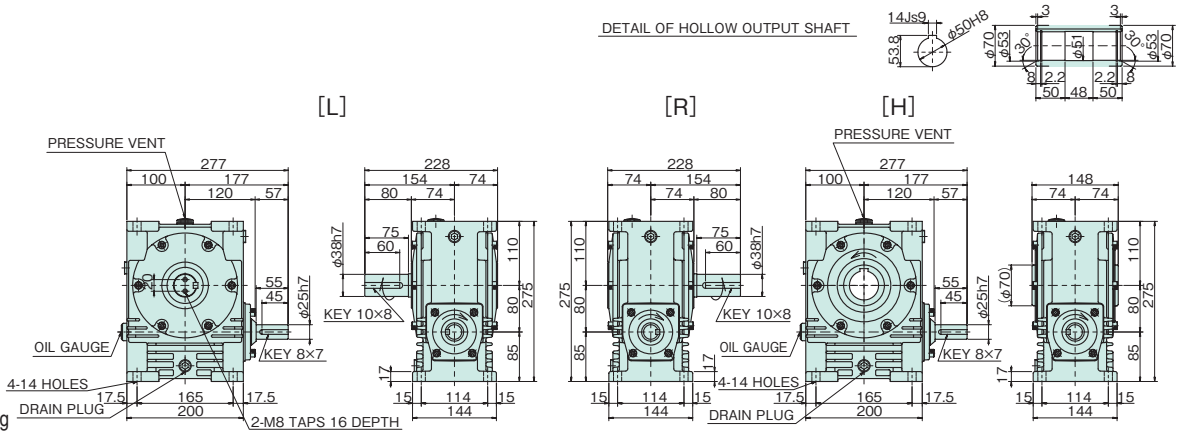

Estimated mass 27 kg

EW80V

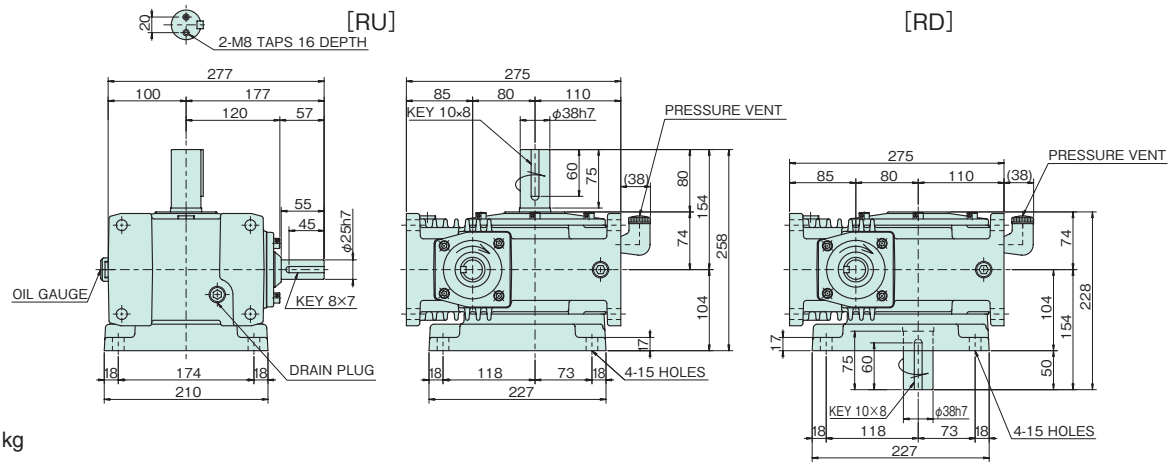

Estimated mass 30 kg

* Refer to page 24 for shaft arrangements and relative direction of rotation.

Transfer Capacity Table

Size	Input	1750 r/min		1450 r/min		1150 r/min		950 r/min		500 r/min		100 r/min	
	Reduction ratio	Input kW	Output torque N·m {kgf·m}	Input kW	Output torque N·m {kgf·m}	Input kW	Output torque N·m {kgf·m}	Input kW	Output torque N·m {kgf·m}	Input kW	Output torque N·m {kgf·m}	Input kW	Output torque N·m {kgf·m}
EW80	10	6.52	329 {33.6}	6.16	372 {38.0}	5.52	417 {42.5}	4.86	441 {45.0}	2.83	474 {48.3}	0.61	474 {48.3}
	15	4.88	358 {36.5}	4.53	397 {40.5}	3.98	434 {44.3}	3.52	459 {46.9}	1.98	473 {48.3}	0.44	474 {48.3}
	20	3.88	370 {37.7}	3.62	412 {42.0}	3.18	449 {45.8}	2.80	473 {48.3}	1.55	473 {48.3}	0.34	473 {48.3}
	25	3.21	374 {38.1}	2.99	414 {42.3}	2.67	460 {46.9}	2.31	474 {48.3}	1.28	474 {48.3}	0.29	474 {48.3}
	30	2.77	371 {37.9}	2.62	416 {42.4}	2.30	451 {46.0}	2.03	474 {48.3}	1.14	474 {48.3}	0.27	474 {48.3}
	40	2.17	370 {37.8}	2.05	413 {42.2}	1.86	461 {47.0}	1.62	473 {48.3}	0.92	473 {48.3}	0.22	474 {48.3}
	50	1.76	361 {36.8}	1.66	400 {40.8}	1.50	443 {45.2}	1.36	473 {48.3}	0.78	474 {48.3}	0.19	474 {48.3}
	60	1.44	342 {34.9}	1.35	376 {38.4}	1.21	414 {42.3}	1.07	429 {43.8}	0.62	429 {43.8}	0.15	430 {43.8}

When running a speed within the shaded boxes , and also continuously for more than two hours, refer to the thermal rating factor on page 17 to factor this into your selection.

Dimensional Drawings SW80T/SW80B/SW80V

See next page for reducers with motors

SW80T

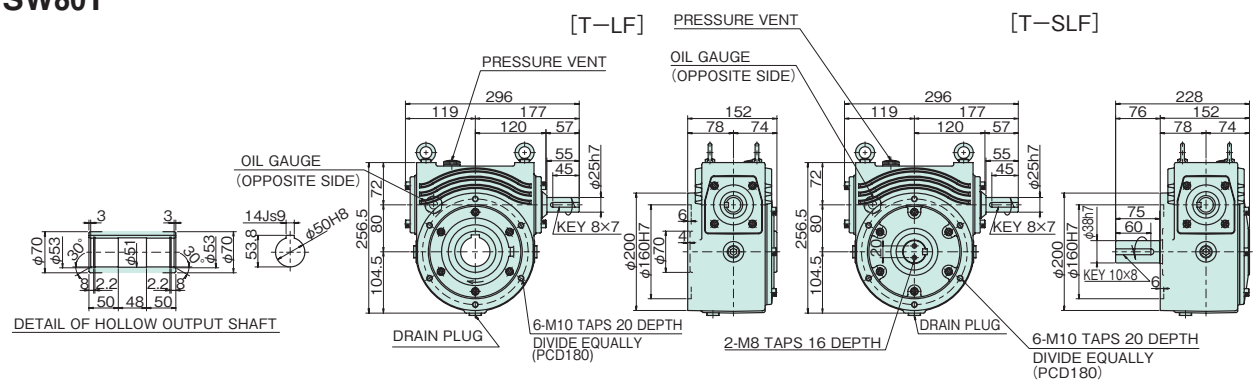

Estimated mass 26 kg

SW80B

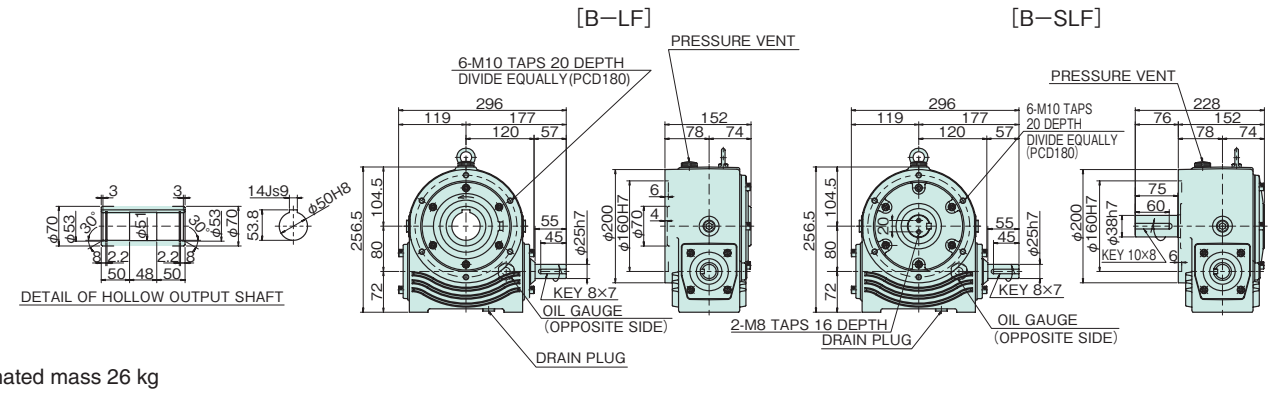

Estimated mass 26 kg

SW80V

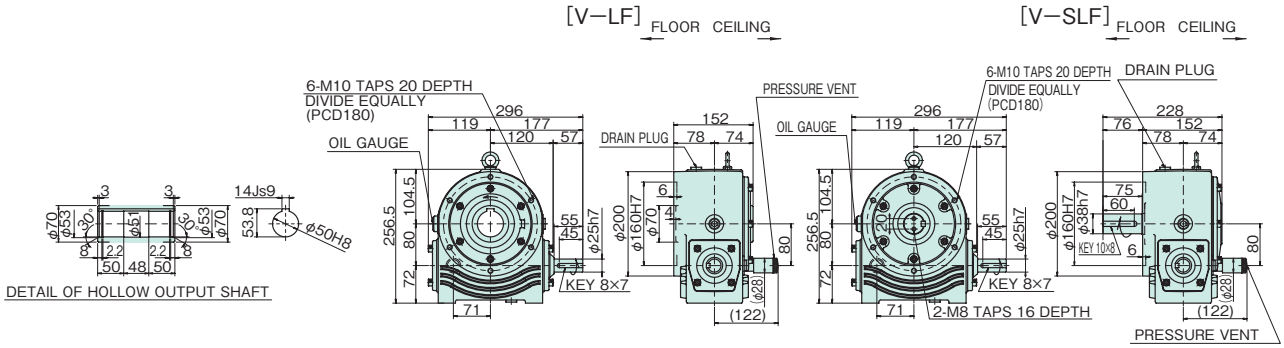

Estimated mass 26 kg

* Refer to page 24 for shaft arrangements and relative direction of rotation.

Transfer Capacity Table

Size	Input	1750 r/min		1450 r/min		1150 r/min		950 r/min		500 r/min		100 r/min	
	Reduction ratio	Input kW	Output torque N·m {kgf·m}	Input kW	Output torque N·m {kgf·m}	Input kW	Output torque N·m {kgf·m}	Input kW	Output torque N·m {kgf·m}	Input kW	Output torque N·m {kgf·m}	Input kW	Output torque N·m {kgf·m}
SW80	10	6.52	329 {33.6}	6.16	372 {38.0}	5.52	417 {42.5}	4.86	441 {45.0}	2.83	474 {48.3}	0.61	474 {48.3}
	15	4.88	358 {36.5}	4.53	397 {40.5}	3.98	434 {44.3}	3.52	459 {46.9}	1.98	473 {48.3}	0.44	474 {48.3}
	20	3.88	370 {37.7}	3.62	412 {42.0}	3.18	449 {45.8}	2.80	473 {48.3}	1.55	473 {48.3}	0.34	473 {48.3}
	25	3.21	374 {38.1}	2.99	414 {42.3}	2.67	460 {46.9}	2.31	474 {48.3}	1.28	474 {48.3}	0.29	474 {48.3}
	30	2.77	371 {37.9}	2.62	416 {42.4}	2.30	451 {46.0}	2.03	474 {48.3}	1.14	474 {48.3}	0.27	474 {48.3}
	40	2.17	370 {37.8}	2.05	413 {42.2}	1.86	461 {47.0}	1.62	473 {48.3}	0.92	473 {48.3}	0.22	474 {48.3}
	50	1.76	361 {36.8}	1.66	400 {40.8}	1.50	443 {45.2}	1.36	473 {48.3}	0.78	474 {48.3}	0.19	474 {48.3}
	60	1.44	342 {34.9}	1.35	376 {38.4}	1.21	414 {42.3}	1.07	429 {43.8}	0.62	429 {43.8}	0.15	430 {43.8}

When running a speed within the shaded boxes , and also continuously for more than two hours, refer to the thermal rating factor on page 17 to factor this into your selection.

Dimensional Drawings EWMR80T/EWMR80V

See previous page for reducers without motors

EWMR80T

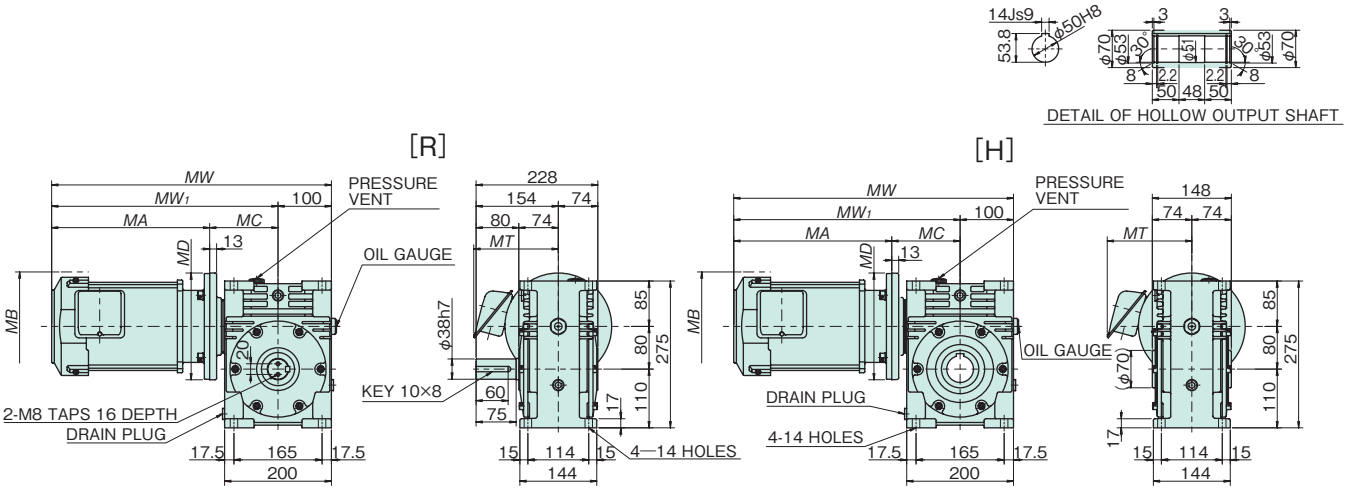

EWMR80V

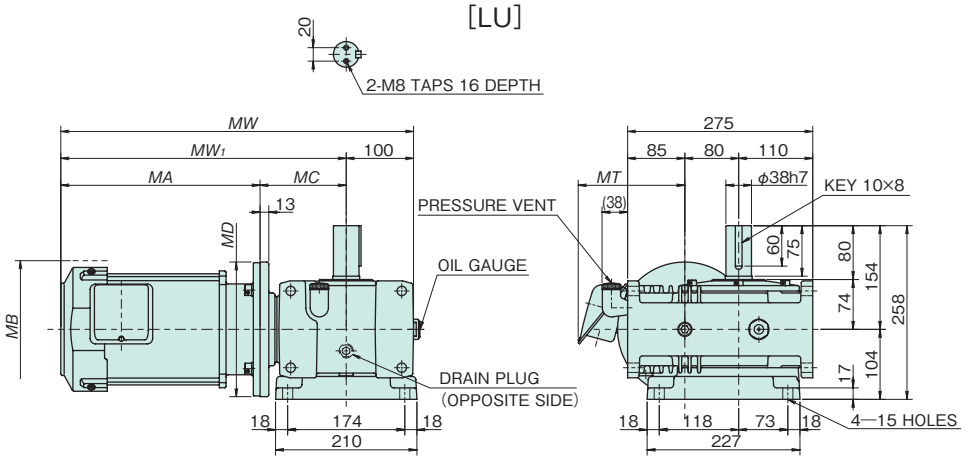

Transfer Capacity Table

* Refer to page 24 for shaft arrangements and relative direction of rotation.

Size	Standard combination		1750 r/min	1450 r/min	Values in ( ) for the motor indicates dimensions for a motor with a brake.								
	Motor kW	Reduction ratio	Output torque N·m {kgf·m}	Output torque N·m {kgf·m}	MA	MC	MW_1	MW	MB	MD	MT	T type Estimated mass kg	V type Estimated mass kg
EWMR80	1.5	40	256 {26.1}	302 {30.8}	296 (360)	128 (128)	424 (488)	524 (588)	204 (202)	200 (200)	158 (155.0)	60 (65)	62 (67)
		50	307 {31.3}	362 {36.9}									
		60	342 {34.9}	376 {38.4}									
	2.2	25	256 {26.2}	305 {31.2}	318 (374)	128 (128)	446 (502)	546 (602)	218 (202)	250 (250)	169 (155.0)	73 (78)	75 (80)
		30	295 {30.1}	350 {35.7}									
	3.7	10	187 {19.1}	224 {22.8}	343 (424)	128 (128)	471 (552)	571 (652)	237 (235)	250 (250)	181 (178.0)	82 (92)	84 (94)
		15	272 {27.7}	325 {33.1}									
		20	353 {36.0}	412 {42.0}									

* Motor/reducer combinations shown are standard.
* Shaded boxes indicate the motor capacity exceeds the input kW of the reducer. Confirm output torque before using.
* Refer to page 17 for sizing. * Thermal rating factor is 1.0.

Dimensional Drawings SWMR80T/SWMR80B/SWMR80V

SWMR80T

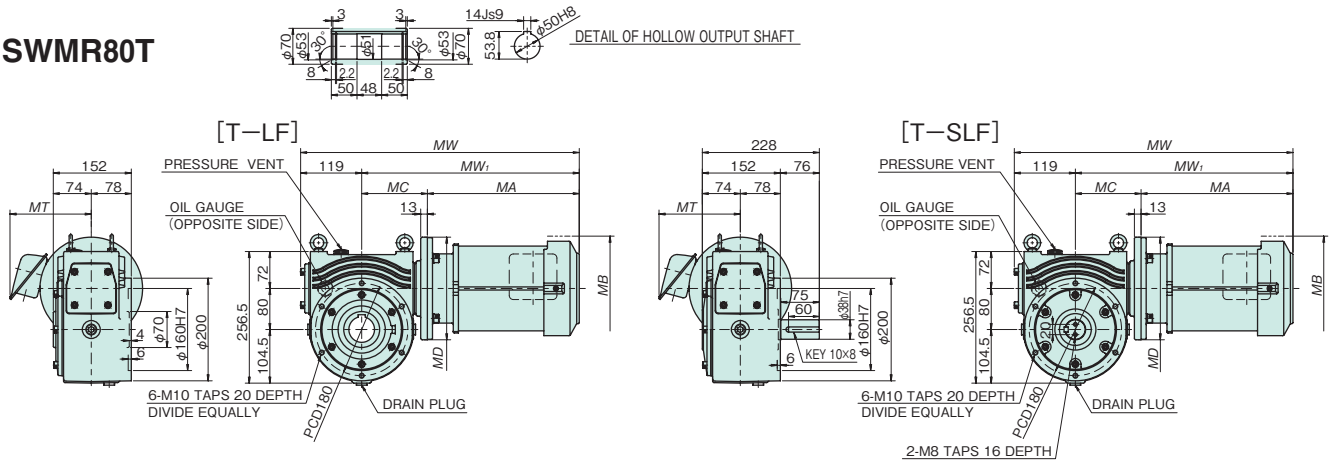

SWMR80B

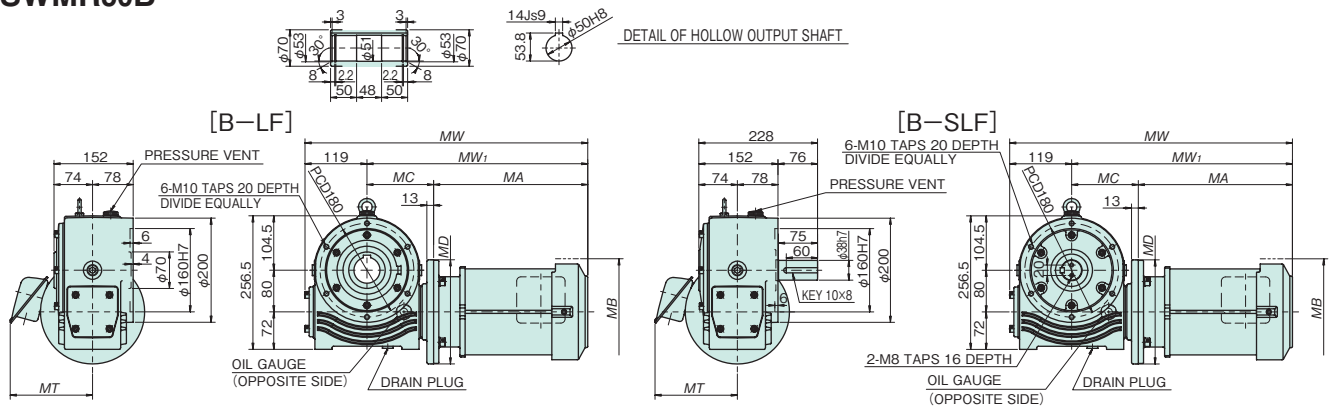

SWMR80V

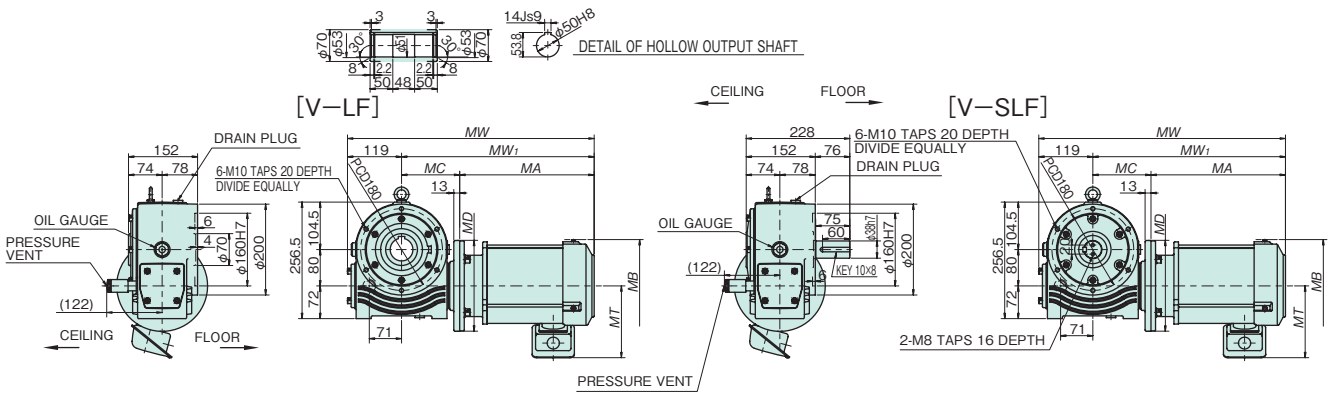

* Refer to page 24 for shaft arrangements and relative direction of rotation.

Transfer Capacity Table

Size	Standard combination		1750 r/min	1450 r/min	Values in ( ) for the motor indicates dimensions for a motor with a brake.							
	Motor kW	Reduction ratio	Output torque N·m {kgf·m}	Output torque N·m {kgf·m}	MA	MC	MW_1	MW	MB	MD	MT	Estimated mass kg
SWMR80	1.5	40	256 {26.1}	302 {30.8}	296 (360)	128 (128)	424 (488)	543 (607)	204 (202)	200 (200)	158 (155.0)	53 (58)
		50	307 {31.3}	362 {36.9}								
		60	342 {34.9}	376 {38.4}								
	2.2	20	210 {21.4}	250 {25.5}	318 (374)	128 (128)	446 (502)	565 (621)	218 (226)	250 (250)	169 (166.0)	67 (72)
		25	256 {26.2}	305 {31.2}								
		30	295 {30.1}	350 {35.7}								
	3.7	10	187 {19.1}	224 {22.8}	343 (424)	128 (128)	471 (552)	590 (671)	237 (235)	250 (250)	181 (178.0)	74 (84)
		15	272 {27.7}	325 {33.1}								
		20	353 {36}	412 {42}								

* Motor/reducer combinations shown are standard.
* Shaded boxes indicate the motor capacity exceeds the input kW of the reducer. Confirm output torque before using.
* Refer to page 17 for sizing. * Thermal rating factor is 1.0.

Dimensional Drawings EW100T/EW100B/EW100V

EW100T

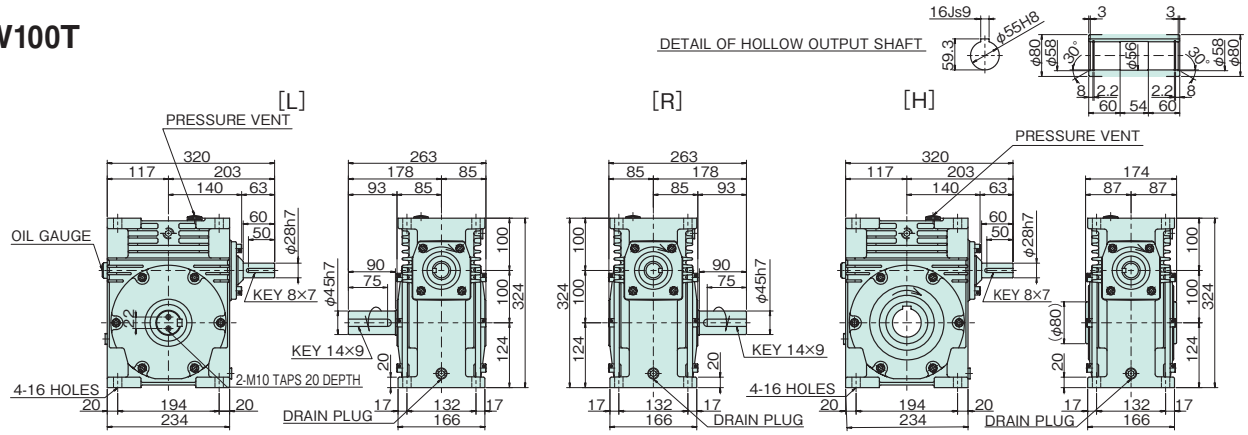

Estimated mass 43 kg

EW100B

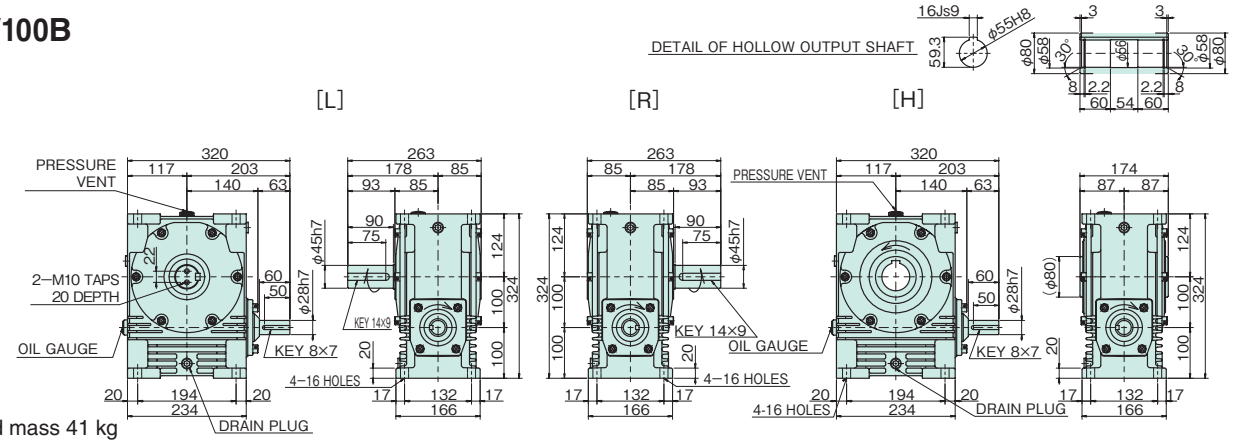

Estimated mass 41 kg

EW100V

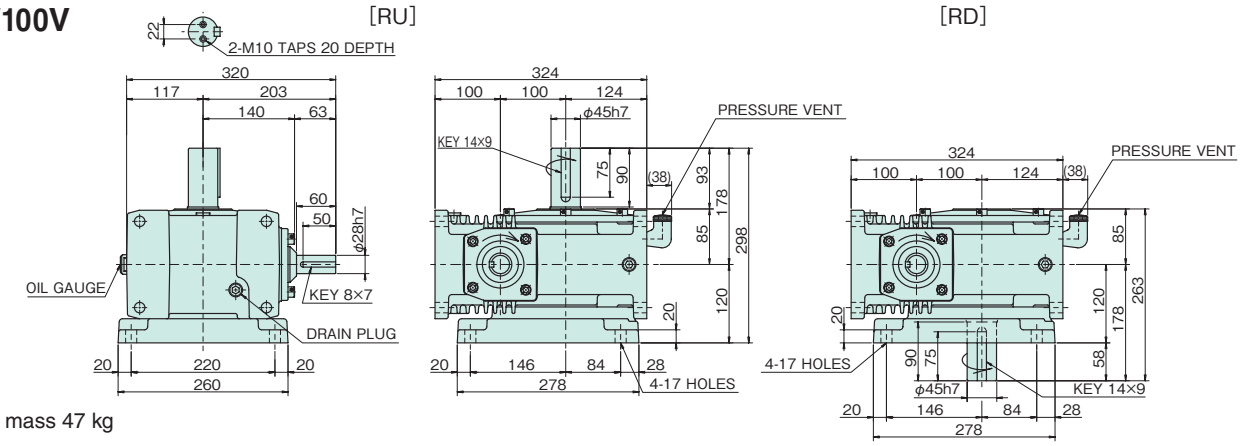

Estimated mass 47 kg

* Refer to page 24 for shaft arrangements and relative direction of rotation.

Transfer Capacity Table

Size	Input / Reduction ratio	1750 r/min Input kW	1750 r/min Output torque N·m {kgf·m}	1450 r/min Input kW	1450 r/min Output torque N·m {kgf·m}	1150 r/min Input kW	1150 r/min Output torque N·m {kgf·m}	950 r/min Input kW	950 r/min Output torque N·m {kgf·m}	500 r/min Input kW	500 r/min Output torque N·m {kgf·m}	100 r/min Input kW	100 r/min Output torque N·m {kgf·m}
EW100	10	10.81	552 {56.3}	9.83	602 {61.4}	9.10	696 {71.1}	8.14	748 {76.3}	5.29	899 {91.8}	1.14	899 {91.8}
	15	8.05	600 {61.2}	7.37	657 {67.1}	6.66	741 {75.6}	5.88	784 {80.0}	3.68	900 {91.8}	0.81	900 {91.8}
	20	6.35	616 {62.8}	5.85	677 {69.1}	5.28	760 {77.5}	4.67	804 {82.0}	2.88	900 {91.8}	0.64	900 {91.8}
	25	5.06	603 {61.5}	4.81	683 {69.7}	4.39	774 {79.0}	3.91	822 {83.9}	2.16	822 {83.9}	0.49	822 {83.9}
	30	4.52	623 {63.6}	4.18	685 {69.9}	3.81	774 {78.9}	3.39	818 {83.5}	2.09	899 {91.8}	0.48	900 {91.8}
	40	3.52	618 {63.1}	3.27	680 {69.4}	3.04	778 {79.4}	2.74	829 {84.6}	1.68	900 {91.8}	0.40	900 {91.8}
	50	2.75	584 {59.6}	2.64	661 {67.5}	2.43	748 {76.3}	2.23	812 {82.9}	1.30	828 {84.5}	0.31	830 {84.7}
	60	2.27	559 {57.1}	2.16	628 {64.1}	1.98	705 {72.0}	1.72	722 {73.6}	0.98	719 {73.4}	0.24	720 {73.5}

When running a speed within the shaded boxes , and also continuously for more than two hours, refer to the thermal rating factor on page 17 to factor this into your selection.

Dimensional Drawings SW100T/SW100B/SW100V

See next page for reducers with motors

SW100T

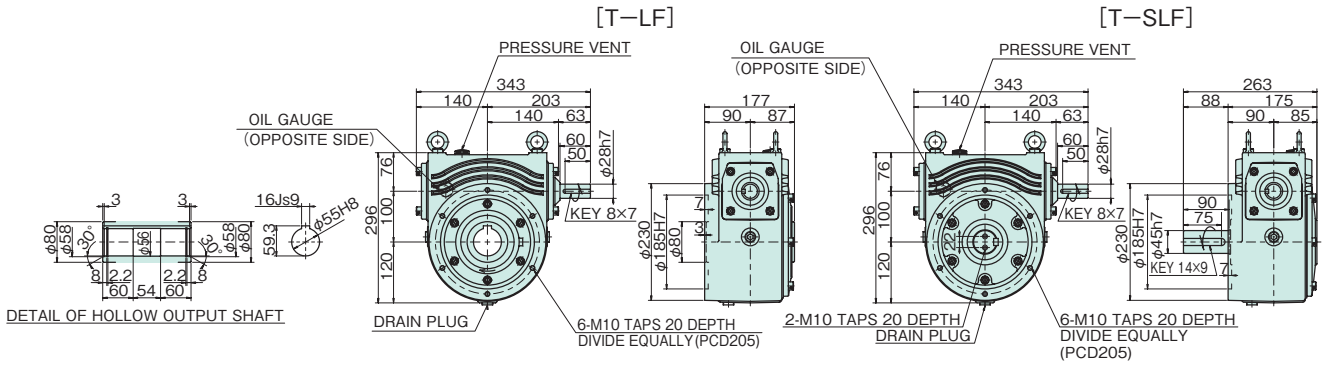

Estimated mass 38 kg

SW100B

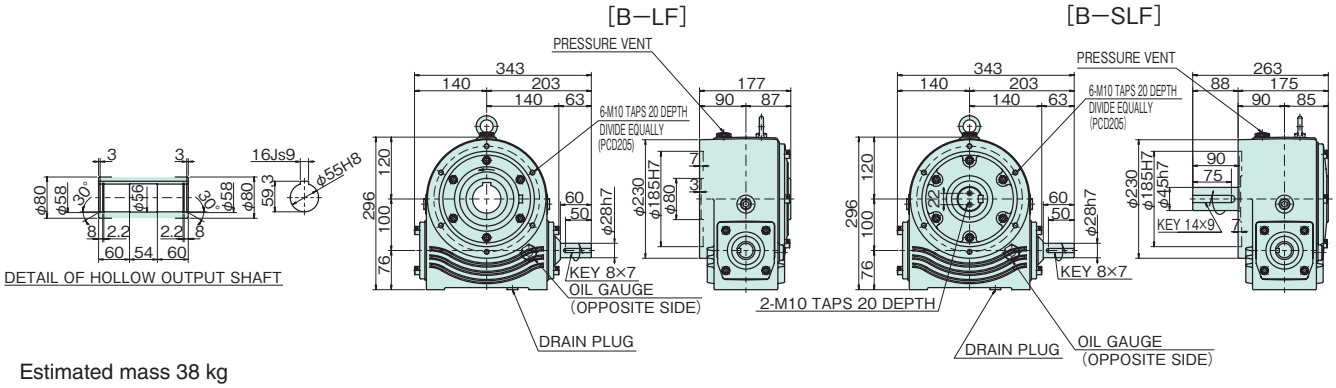

Estimated mass 38 kg

SW100V

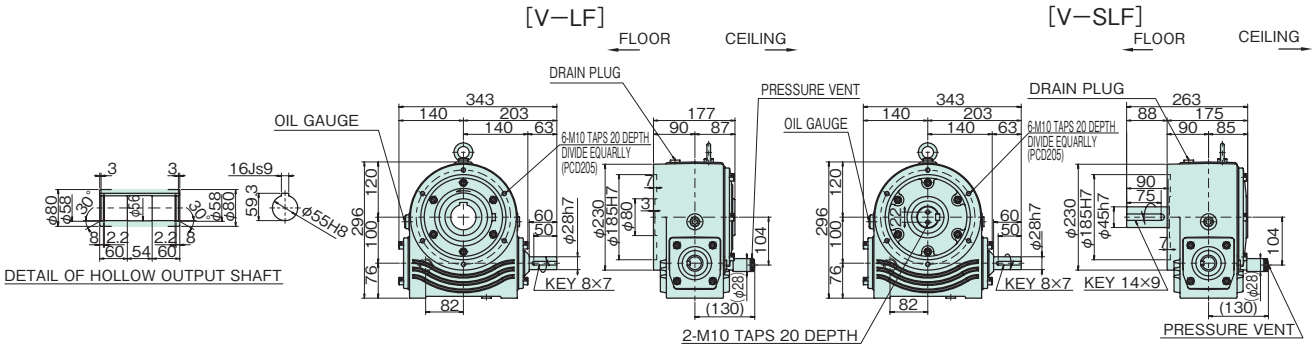

Estimated mass 38 kg

* Refer to page 24 for shaft arrangements and relative direction of rotation.

Transfer Capacity Table

Size	Input	1750 r/min		1450 r/min		1150 r/min		950 r/min		500 r/min		100 r/min	
	Reduction ratio	Input kW	Output torque N·m {kgf·m}	Input kW	Output torque N·m {kgf·m}	Input kW	Output torque N·m {kgf·m}	Input kW	Output torque N·m {kgf·m}	Input kW	Output torque N·m {kgf·m}	Input kW	Output torque N·m {kgf·m}
SW100	10	10.81	552 {56.3}	9.83	602 {61.4}	9.10	696 {71.1}	8.14	748 {76.3}	5.29	899 {91.8}	1.14	899 {91.8}
	15	8.05	600 {61.2}	7.37	657 {67.1}	6.66	741 {75.6}	5.88	784 {80.0}	3.68	900 {91.8}	0.81	900 {91.8}
	20	6.35	616 {62.8}	5.85	677 {69.1}	5.28	760 {77.5}	4.67	804 {82.0}	2.88	900 {91.8}	0.64	900 {91.8}
	25	5.06	603 {61.5}	4.81	683 {69.7}	4.39	774 {79.0}	3.91	822 {83.9}	2.16	822 {83.9}	0.49	822 {83.9}
	30	4.52	623 {63.6}	4.18	685 {69.9}	3.81	774 {78.9}	3.39	818 {83.5}	2.09	899 {91.8}	0.48	900 {91.8}
	40	3.52	618 {63.1}	3.27	680 {69.4}	3.04	778 {79.4}	2.74	829 {84.6}	1.68	900 {91.8}	0.40	900 {91.8}
	50	2.75	584 {59.6}	2.64	661 {67.5}	2.43	748 {76.3}	2.23	812 {82.9}	1.30	828 {84.5}	0.31	830 {84.7}
	60	2.27	559 {57.1}	2.16	628 {64.1}	1.98	705 {72.0}	1.72	722 {73.6}	0.98	719 {73.4}	0.24	720 {73.5}

When running a speed within the shaded boxes , and also continuously for more than two hours, refer to the thermal rating factor on page 17 to factor this into your selection.

Dimensional Drawings EWMR100T/EWMR100V

See previous page for reducers without motors

EWMR100T

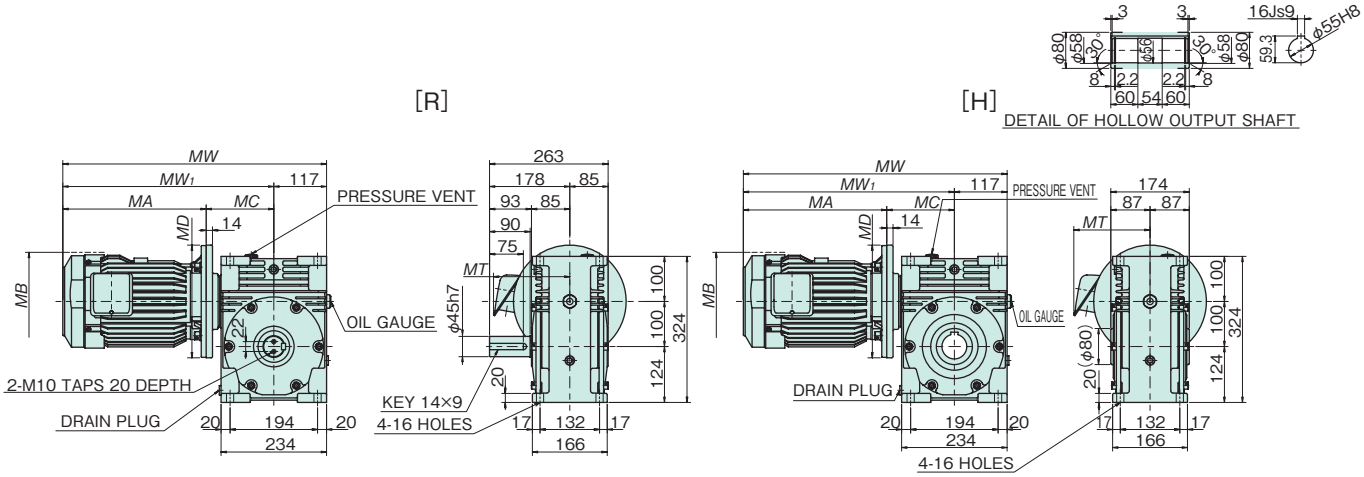

EWMR100V

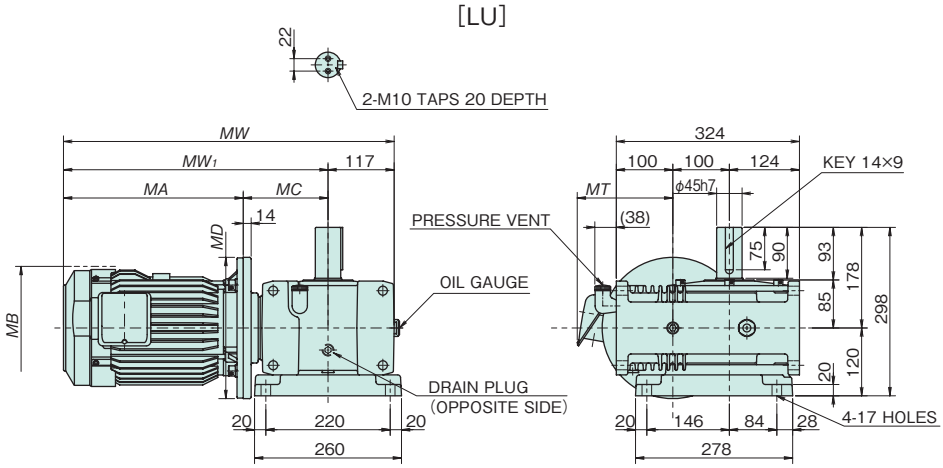

Transfer Capacity Table

* Refer to page 24 for shaft arrangements and relative direction of rotation.

Size	Standard combination		1750 r/min	1450 r/min	Values in ( ) for the motor indicates dimensions for a motor with a brake.								
	Motor kW	Reduction ratio	Output torque N·m {kgf·m}	Output torque N·m {kgf·m}	MA	MC	MW_1	MW	MB	MD	MT	T type Estimated mass kg	V type Estimated mass kg
EWMR100	2.2	40	386 {39.4}	457 {46.7}	318 (374)	150 (150)	468 (524)	585 (641)	218 (226)	250 (250)	169 (166.0)	85 (90)	90 (95)
		50	467 {47.6}	552 {56.3}									
		60	543 {55.4}	628 {64.1}									
	3.7	25	440 {44.9}	525 {53.6}	343 (424)	150 (150)	493 (574)	610 (691)	237 (226)	250 (250)	181 (166.0)	94 (104)	99 (109)
		30	510 {52.1}	607 {61.9}									
	5.5	10	281 {28.6}	337 {34.3}	402 (475)	157 (157)	559 (632)	676 (749)	277 (275)	300 (300)	197 (200.0)	116 (128)	121 (133)
		15	410 {41.8}	491 {50.1}									
		20	533 {54.4}	637 {65.0}									

* Motor/reducer combinations shown are standard.
* Shaded boxes indicate the motor capacity exceeds the input kW of the reducer. Confirm output torque before using.
* Refer to page 17 for sizing. * Thermal rating factor is 1.0.

Dimensional Drawings SWMR100T/SWMR100B/SWMR100V

SWMR100T

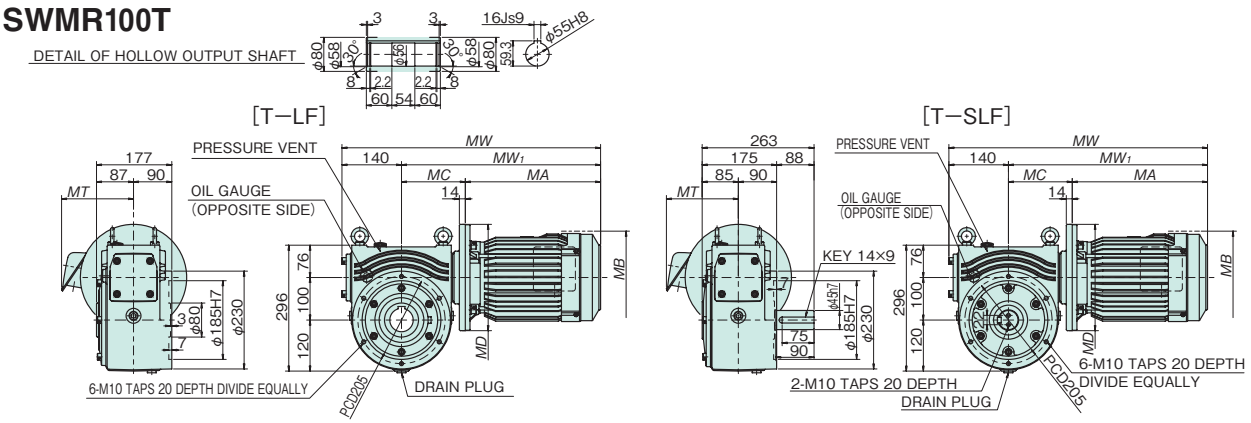

SWMR100B

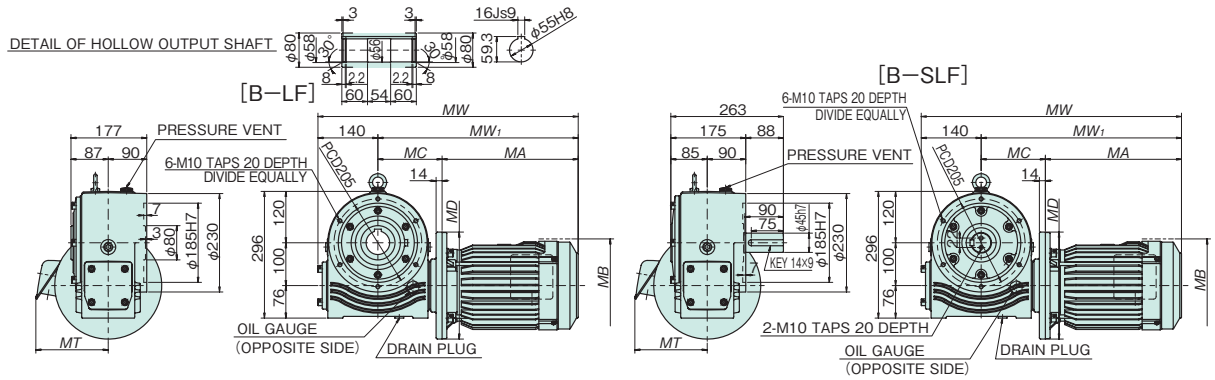

SWMR100V

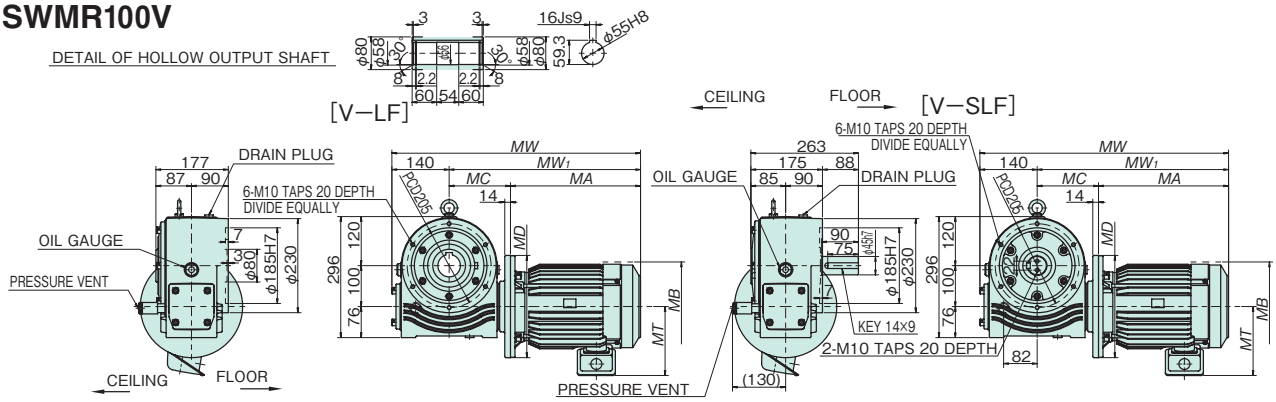

* Refer to page 24 for shaft arrangements and relative direction of rotation.

Transfer Capacity Table

Size	Standard combination		1750 r/min	1450 r/min	Values in ( ) for the motor indicates dimensions for a motor with a brake.							
	Motor kW	Reduction ratio	Output torque N·m {kgf·m}	Output torque N·m {kgf·m}	MA	MC	MW_1	MW	MB	MD	MT	Estimated mass kg
SWMR100	2.2	40	386 {39.4}	457 {46.7}	318 (374)	150 (150)	468 (524)	608 (664)	218 (226)	250 (250)	169 (166.0)	80 (85)
		50	467 {47.6}	552 {56.3}								
		60	543 {55.4}	628 {64.1}								
	3.7	25	440 {44.9}	525 {53.6}	343 (424)	150 (150)	493 (574)	633 (714)	237 (235)	250 (250)	181 (178.0)	87 (97)
		30	510 {52.1}	607 {61.9}								
	5.5	10	281 {28.6}	337 {34.3}	402 (475)	157 (157)	559 (632)	699 (772)	277 (275)	300 (300)	197 (200.0)	101 (113)
		15	410 {41.8}	491 {50.1}								
		20	533 {54.4}	637 {65.0}								

* Motor/reducer combinations shown are standard.
* Shaded boxes indicate the motor capacity exceeds the input kW of the reducer. Confirm output torque before using.
* Refer to page 17 for sizing. * Thermal rating factor is 1.0.

Dimensional Drawings EW125T/EW125B/EW125V

EW125T

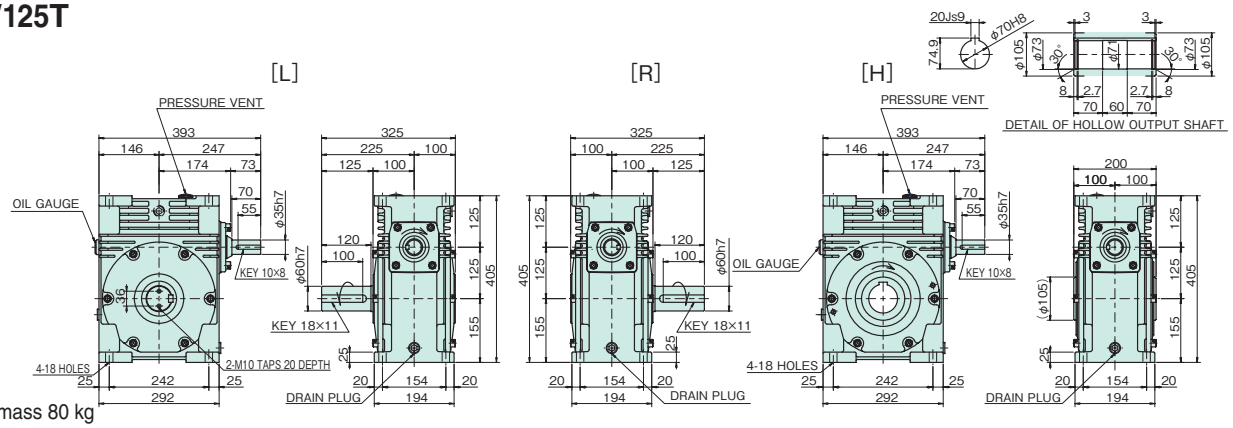

Estimated mass 80 kg

EW125B

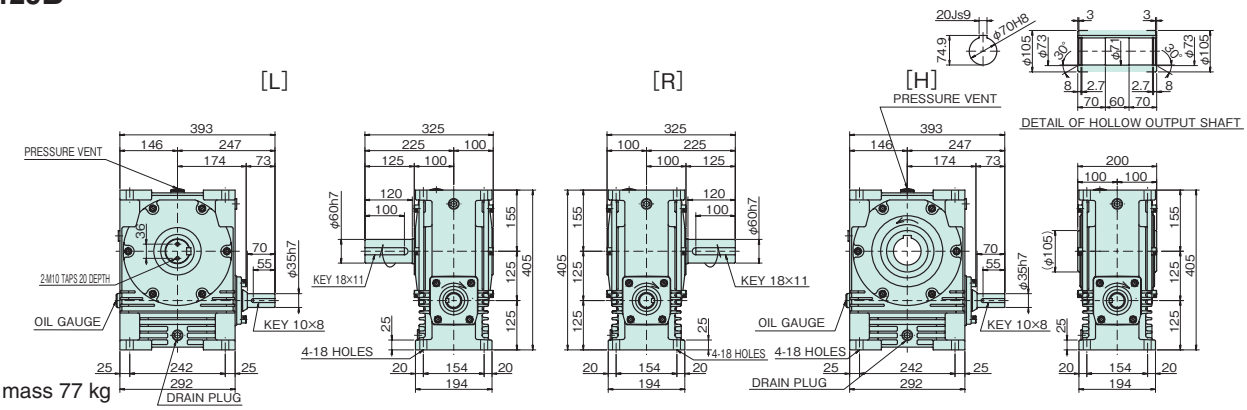

Estimated mass 77 kg

EW125V

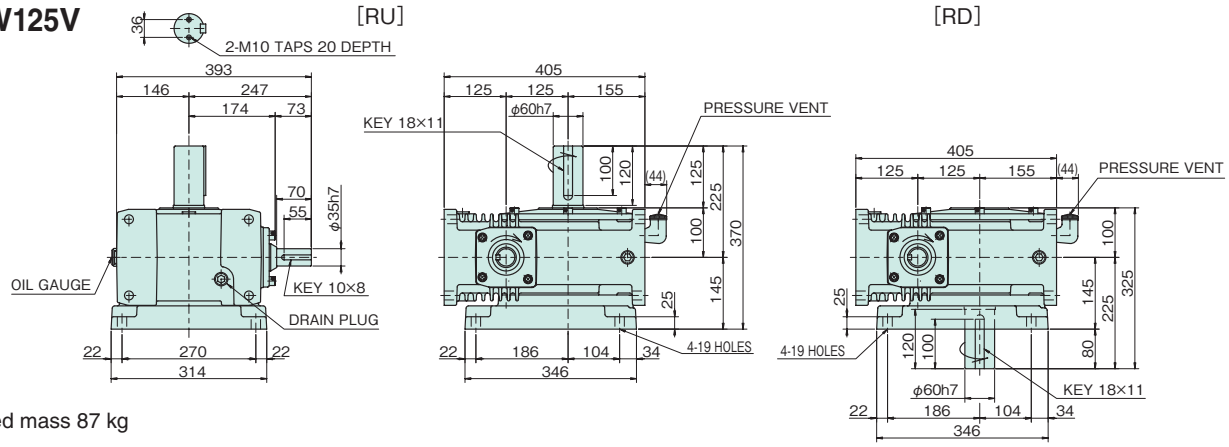

Estimated mass 87 kg

* Refer to page 24 for shaft arrangements and relative direction of rotation.

Transfer Capacity Table

Size	Input	1750 r/min		1450 r/min		1150 r/min		950 r/min		500 r/min		100 r/min	
	Reduction ratio	Input kW	Output torque N·m {kgf·m}	Input kW	Output torque N·m {kgf·m}	Input kW	Output torque N·m {kgf·m}	Input kW	Output torque N·m {kgf·m}	Input kW	Output torque N·m {kgf·m}	Input kW	Output torque N·m {kgf·m}
EW125	10	17.70	909 {92.7}	16.42	1012 {103}	14.66	1130 {115}	13.80	1279 {131}	9.55	1637 {167}	2.14	1705 {174}
	15	13.13	987 {101}	12.20	1099 {112}	10.98	1233 {126}	10.32	1390 {142}	6.90	1704 {174}	1.52	1704 {174}
	20	10.27	1011 {103}	9.57	1126 {115}	8.69	1274 {130}	8.10	1420 {145}	5.33	1704 {174}	1.19	1704 {174}
	25	8.46	1020 {104}	7.64	1098 {112}	7.20	1286 {131}	6.70	1429 {146}	4.27	1648 {168}	0.96	1648 {168}
	30	7.33	1025 {105}	6.85	1141 {117}	6.23	1285 {131}	5.88	1444 {147}	3.88	1704 {174}	0.90	1705 {174}
	40	5.63	1015 {104}	5.28	1131 {115}	4.85	1281 {131}	4.55	1425 {145}	3.07	1705 {174}	0.73	1705 {174}
	50	4.55	986 {101}	4.15	1065 {109}	3.95	1245 {127}	3.71	1382 {141}	2.54	1656 {169}	0.62	1666 {170}
	60	3.72	936 {95.5}	3.42	1018 {104}	3.25	1182 {121}	3.04	1306 {133}	1.91	1430 {146}	0.47	1439 {147}

When running a speed within the shaded boxes , and also continuously for more than two hours, refer to the thermal rating factor on page 17 to factor this into your selection.

Dimensional Drawings SW125T/SW125B/SW125V

See next page for reducers with motors

SW125T

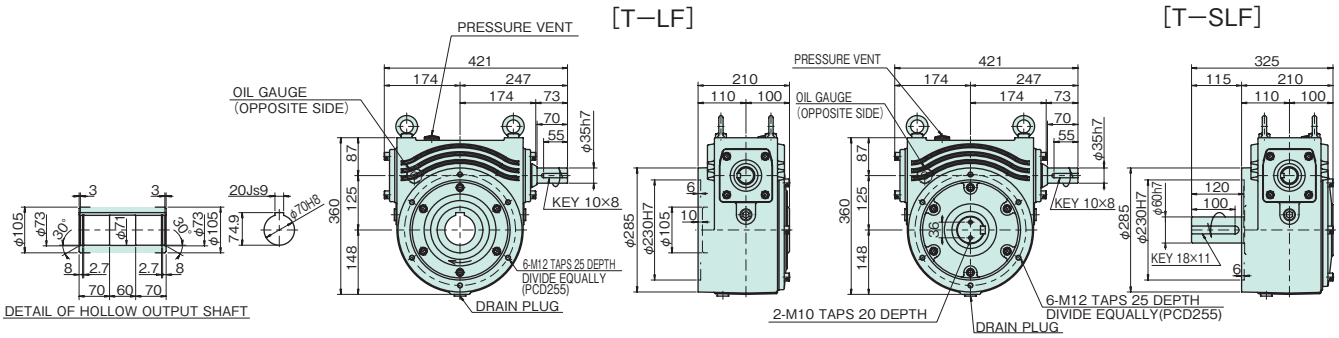

Estimated mass 72 kg

SW125B

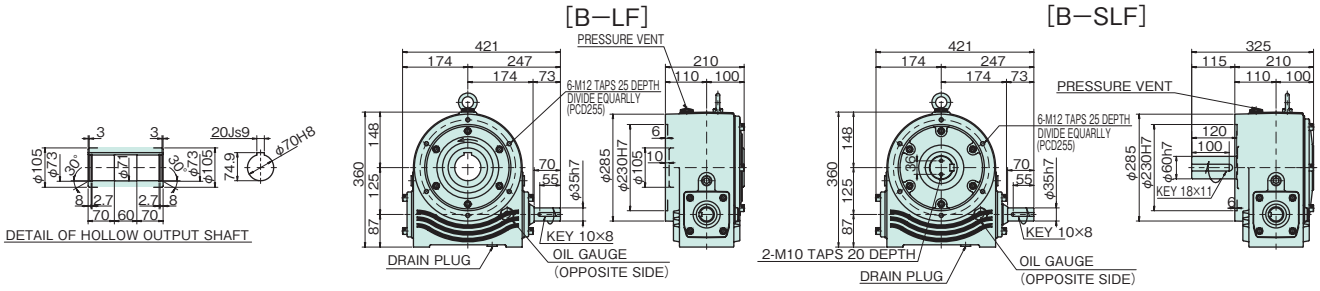

Estimated mass 72 kg

SW125V

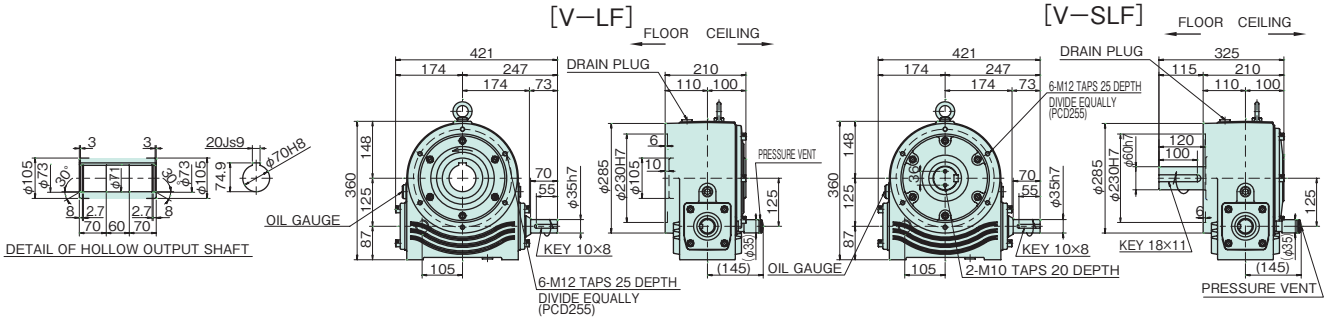

Estimated mass 72 kg

* Refer to page 24 for shaft arrangements and relative direction of rotation.

Transfer Capacity Table

Size	Input	1750 r/min		1450 r/min		1150 r/min		950 r/min		500 r/min		100 r/min	
	Reduction ratio	Input kW	Output torque N·m {kgf·m}	Input kW	Output torque N·m {kgf·m}	Input kW	Output torque N·m {kgf·m}	Input kW	Output torque N·m {kgf·m}	Input kW	Output torque N·m {kgf·m}	Input kW	Output torque N·m {kgf·m}
SW125	10	17.70	909 {92.7}	16.42	1012 {103}	14.66	1130 {115}	13.80	1279 {131}	9.55	1637 {167}	2.14	1705 {174}
	15	13.13	987 {101}	12.20	1099 {112}	10.98	1233 {126}	10.32	1390 {142}	6.90	1704 {174}	1.52	1704 {174}
	20	10.27	1011 {103}	9.57	1126 {115}	8.69	1274 {130}	8.10	1420 {145}	5.33	1704 {174}	1.19	1704 {174}
	25	8.46	1020 {104}	7.64	1098 {112}	7.20	1286 {131}	6.70	1429 {146}	4.27	1648 {168}	0.96	1648 {168}
	30	7.33	1025 {105}	6.85	1141 {117}	6.23	1285 {131}	5.88	1444 {147}	3.88	1704 {174}	0.90	1705 {174}
	40	5.63	1015 {104}	5.28	1131 {115}	4.85	1281 {131}	4.55	1425 {145}	3.07	1705 {174}	0.73	1705 {174}
	50	4.55	986 {101}	4.15	1065 {109}	3.95	1245 {127}	3.71	1382 {141}	2.54	1656 {169}	0.62	1666 {170}
	60	3.72	936 {95.5}	3.42	1018 {104}	3.25	1182 {121}	3.04	1306 {133}	1.91	1430 {146}	0.47	1439 {147}

When running a speed within the shaded boxes , and also continuously for more than two hours, refer to the thermal rating factor on page 17 to factor this into your selection.

Dimensional Drawings EWMR125T/EWMR125V

See previous page for reducers without motors

EWMR125T

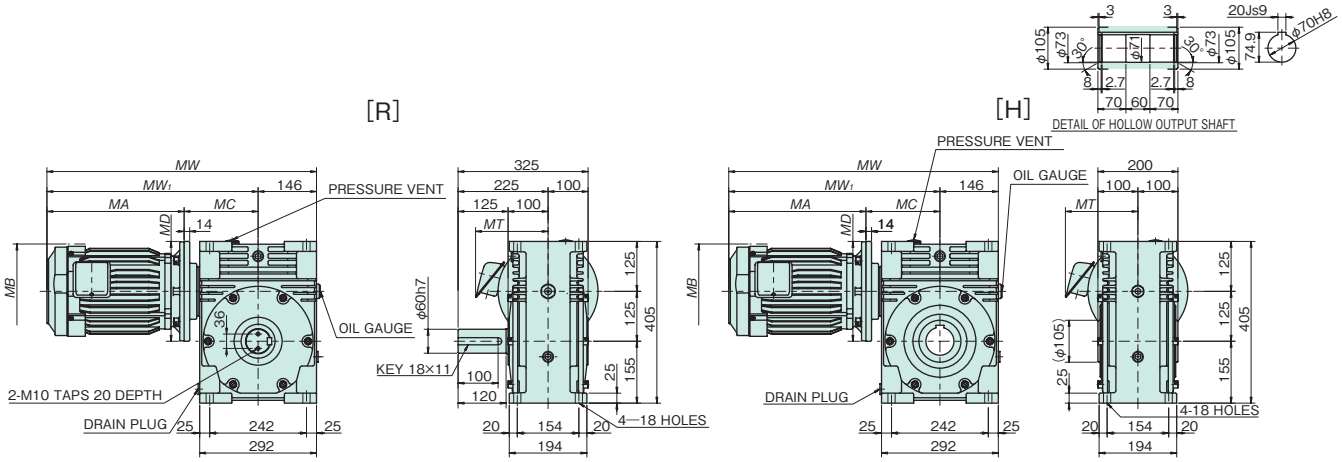

EWMR125V

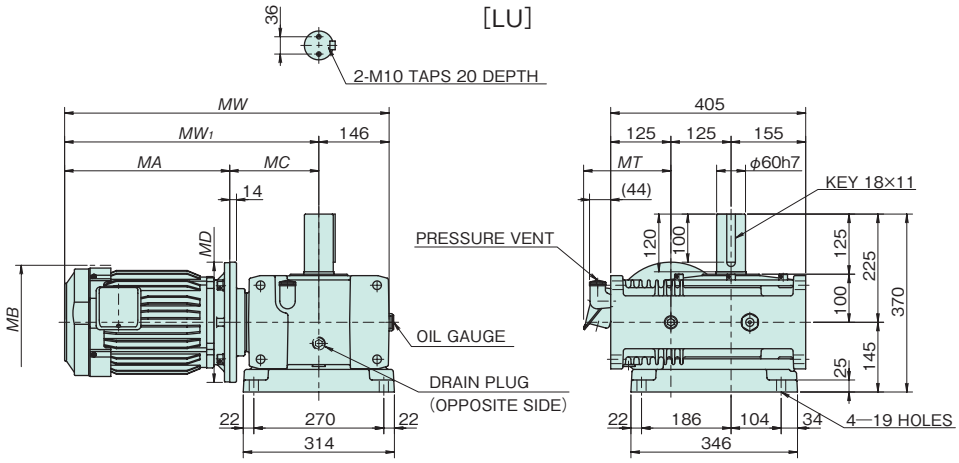

* Refer to page 24 for shaft arrangements and relative direction of rotation.

Transfer Capacity Table

Size	Standard combination		1750 r/min	1450 r/min	Values in ( ) for the motor indicates dimensions for a motor with a brake.								
	Motor kW	Reduction ratio	Output torque N·m {kgf·m}	Output torque N·m {kgf·m}	MA	MC	MW_1	MW	MB	MD	MT	T type Estimated mass kg	V type Estimated mass kg
EWMR125	3.7	40	667 {68.0}	792 {80.8}	343 (424)	185 (185)	528 (609)	674 (755)	237 (235)	250 (250)	181 (178.0)	134 (144)	141 (151)
		50	802 {81.8}	949 {96.8}									
		60	931 {95.0}	1018 {104}									
	5.5	25	662 {67.6}	791 {80.7}	402 (475)	185 (185)	587 (660)	733 (806)	277 (235)	300 (300)	197 (178.0)	156 (168)	163 (175)
		30	770 {78.5}	916 {93.5}									

* Motor/reducer combinations shown are standard.
* Shaded boxes indicate the motor capacity exceeds the input kW of the reducer. Confirm output torque before using.
* Refer to page 17 for sizing. * Thermal rating factor is 1.0.

Dimensional Drawings SWMR125T/SWMR125B/SWMR125V

SWMR125T

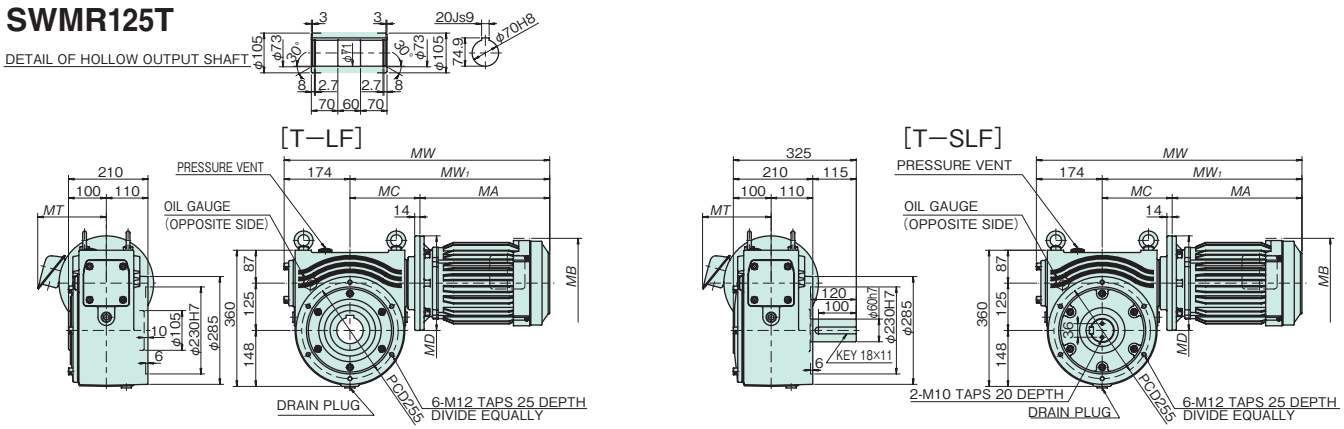

SWMR125B

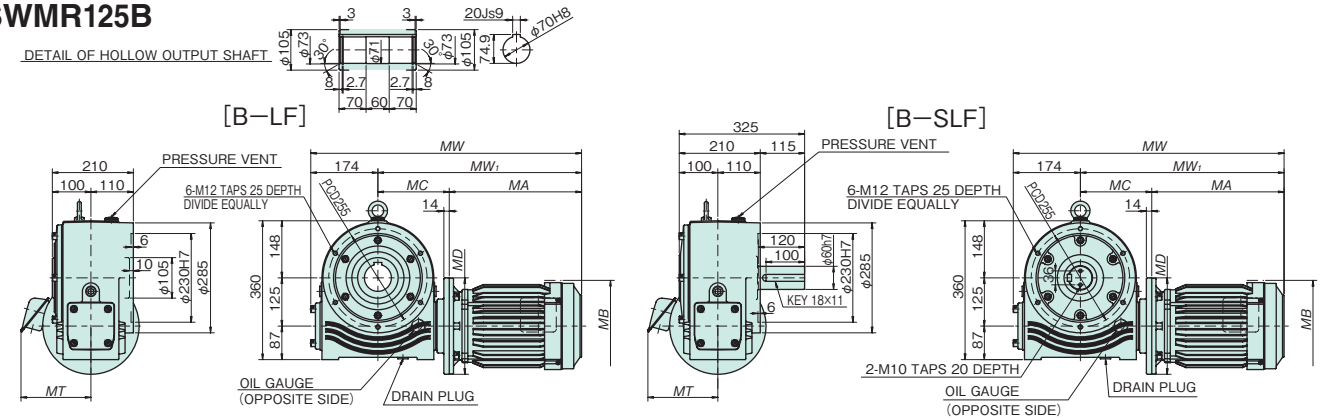

SWMR125V

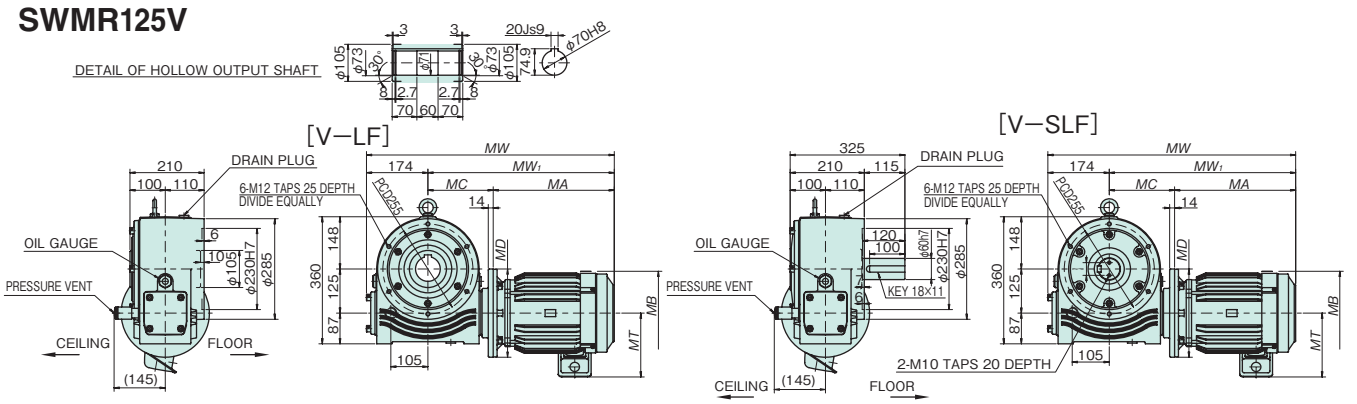

* Refer to page 24 for shaft arrangements and relative direction of rotation.

Transfer Capacity Table

Size	Standard combination		1750 r/min	1450 r/min	Values in ( ) for the motor indicates dimensions for a motor with a brake.							
	Motor kW	Reduction ratio	Output torque N·m {kgf·m}	Output torque N·m {kgf·m}	MA	MC	MW_1	MW	MB	MD	MT	Estimated mass kg
SWMR125	3.7	40	667 {68.0}	792 {80.8}	343 (424)	185 (185)	528 (609)	702 (783)	237 (235)	250 (250)	181 (178.0)	120 (130)
		50	802 {81.8}	949 {96.8}								
		60	931 {95.0}	1018 {104}								
	5.5	25	662 {67.6}	791 {80.7}	402 (475)	185 (185)	587 (660)	761 (834)	277 (275)	300 (300)	197 (200.0)	135 (147)
		30	770 {78.5}	916 {93.5}								

* Motor/reducer combinations shown are standard.
* Shaded boxes indicate the motor capacity exceeds the input kW of the reducer. Confirm output torque before using.
* Refer to page 17 for sizing. * Thermal rating factor is 1.0.

Dimensional Drawings EW150T/EW150B/EW150V

EW150T

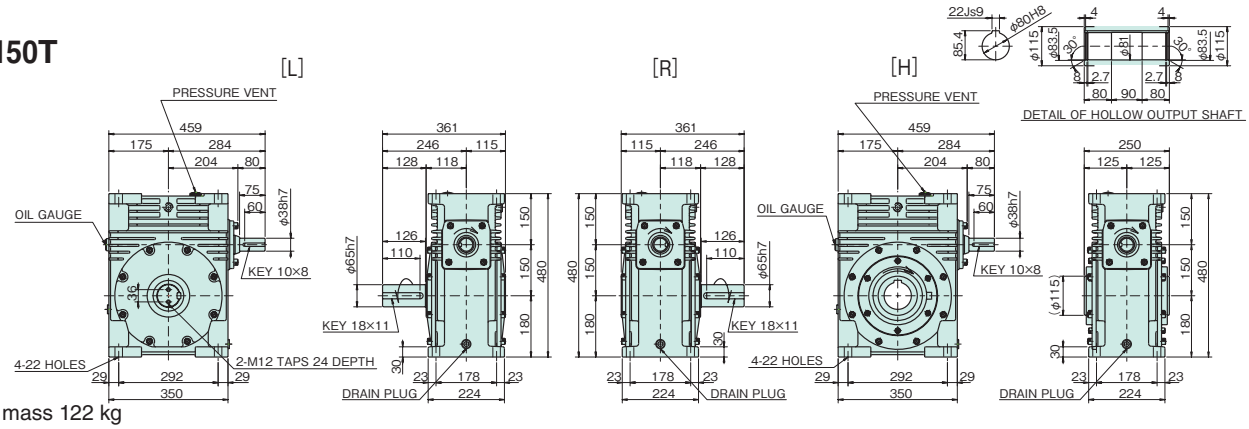

Estimated mass 122 kg

EW150B

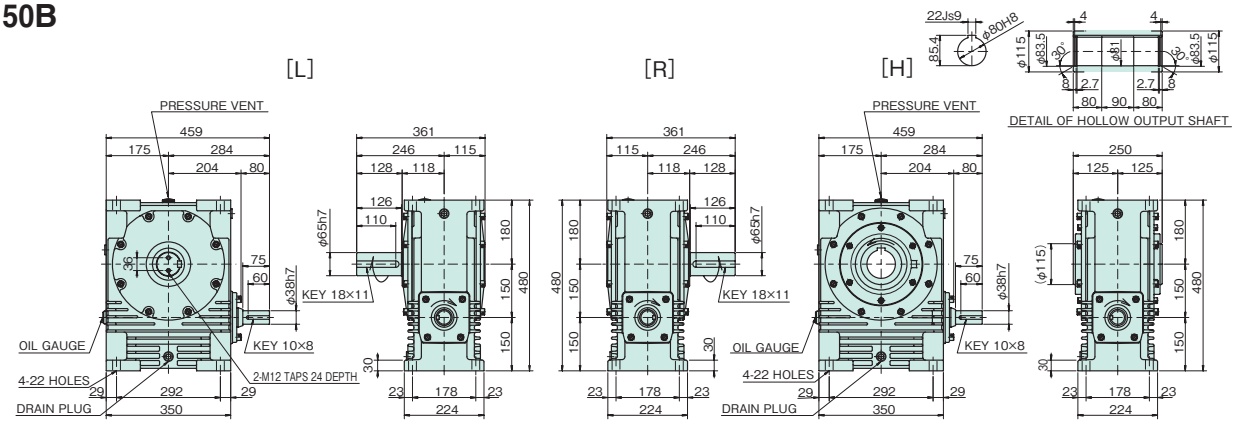

Estimated mass 116 kg

EW150V

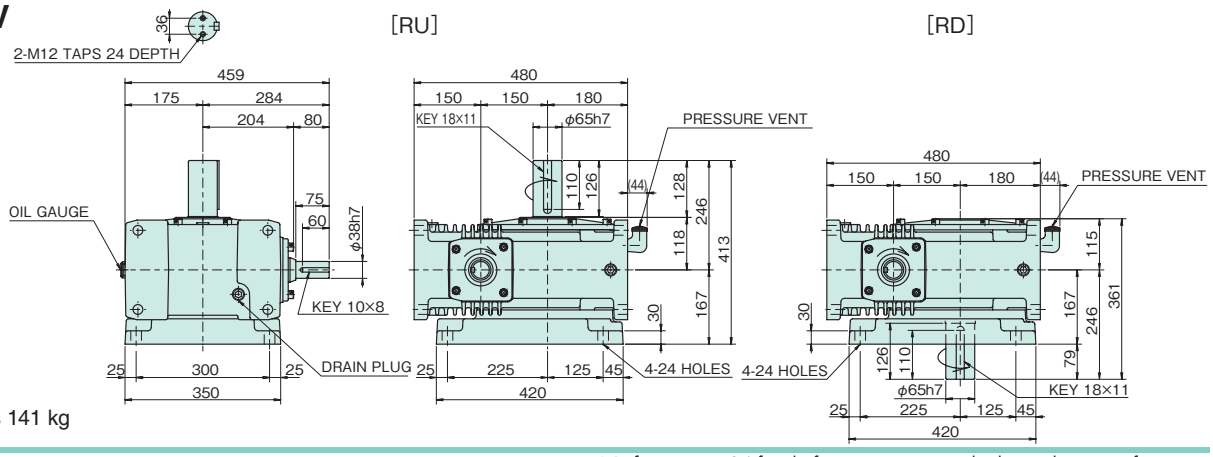

Estimated mass 141 kg

* Refer to page 24 for shaft arrangements and relative direction of rotation.

Transfer Capacity Table

Size	Input / Reduction ratio	1750 r/min Input kW	1750 r/min Output torque N·m {kgf·m}	1450 r/min Input kW	1450 r/min Output torque N·m {kgf·m}	1150 r/min Input kW	1150 r/min Output torque N·m {kgf·m}	950 r/min Input kW	950 r/min Output torque N·m {kgf·m}	500 r/min Input kW	500 r/min Output torque N·m {kgf·m}	100 r/min Input kW	100 r/min Output torque N·m {kgf·m}
EW150	10	26.45	1364 {139}	24.52	1519 {155}	22.36	1734 {177}	20.31	1894 {193}	14.51	2508 {256}	3.29	2646 {270}
	15	19.58	1482 {151}	18.19	1650 {168}	16.62	1883 {192}	15.21	2068 {211}	10.41	2600 {265}	2.33	2646 {270}
	20	15.33	1519 {155}	14.26	1691 {173}	12.65	1869 {191}	12.05	2134 {218}	8.19	2646 {270}	1.83	2646 {270}
	25	12.45	1522 {155}	11.59	1695 {173}	10.48	1906 {195}	9.85	2143 {219}	6.69	2646 {270}	1.50	2646 {270}
	30	10.87	1539 {157}	10.15	1713 {175}	9.35	1956 {200}	8.31	2074 {212}	5.42	2421 {247}	1.38	2646 {270}
	40	8.36	1525 {156}	7.83	1698 {173}	7.03	1883 {192}	6.74	2144 {219}	4.69	2646 {270}	1.12	2646 {270}
	50	6.62	1474 {151}	6.21	1642 {168}	5.68	1849 {189}	5.38	2077 {212}	3.89	2646 {270}	0.93	2646 {270}
	60	5.43	1402 {143}	5.11	1561 {159}	4.69	1758 {179}	4.45	1974 {201}	3.31	2563 {262}	0.82	2586 {264}

When running a speed within the shaded boxes , and also continuously for more than two hours, refer to the thermal rating factor on page 17 to factor this into your selection.

Dimensional Drawings SW150T/SW150B/SW150V

See next page for reducers with motors

SW150T

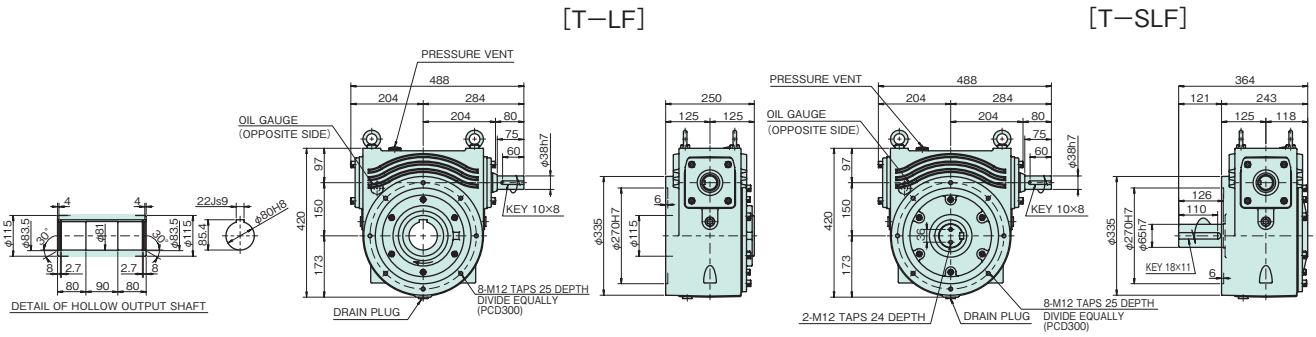

Estimated mass 113 kg

SW150B

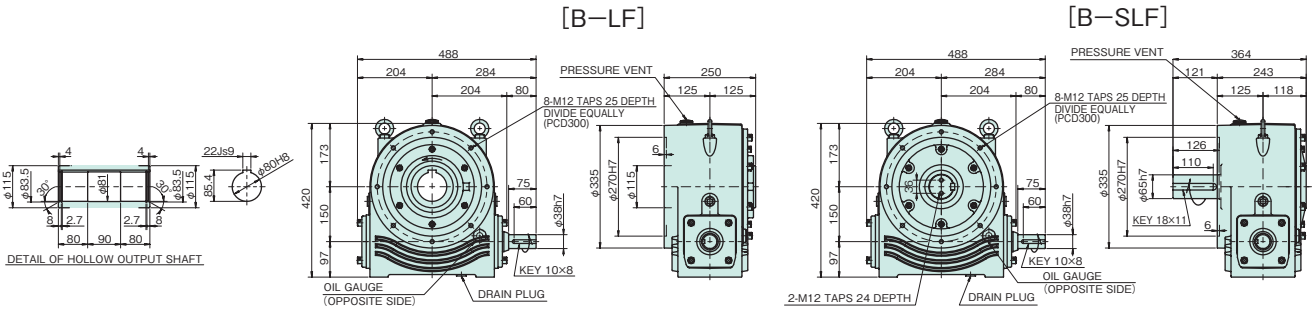

Estimated mass 113 kg

SW150V

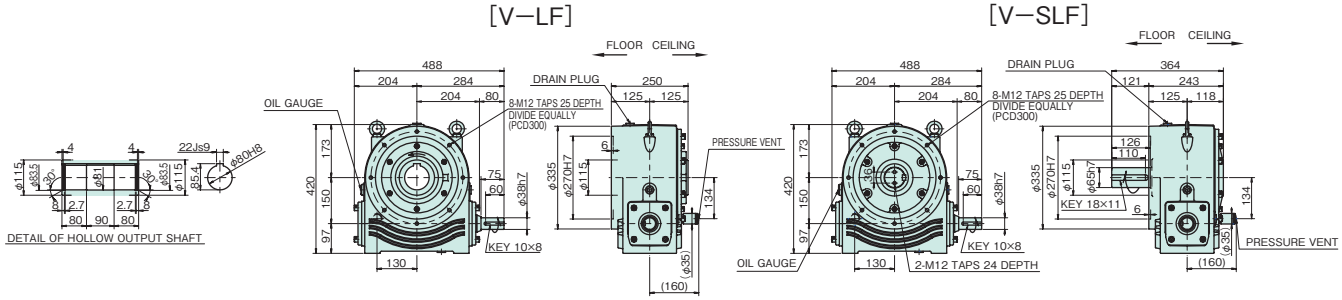

Estimated mass 113 kg

* Refer to page 24 for shaft arrangements and relative direction of rotation.

Transfer Capacity Table

Size	Input	1750 r/min		1450 r/min		1150 r/min		950 r/min		500 r/min		100 r/min	
	Reduction ratio	Input kW	Output torque N·m {kgf·m}	Input kW	Output torque N·m {kgf·m}	Input kW	Output torque N·m {kgf·m}	Input kW	Output torque N·m {kgf·m}	Input kW	Output torque N·m {kgf·m}	Input kW	Output torque N·m {kgf·m}
SW150	10	26.45	1364 {139}	24.52	1519 {155}	22.36	1734 {177}	20.31	1894 {193}	14.51	2508 {256}	3.29	2646 {270}
	15	19.58	1482 {151}	18.19	1650 {168}	16.62	1883 {192}	15.21	2068 {211}	10.41	2600 {265}	2.33	2646 {270}
	20	15.33	1519 {155}	14.26	1691 {173}	12.65	1869 {191}	12.05	2134 {218}	8.19	2646 {270}	1.83	2646 {270}
	25	12.45	1522 {155}	11.59	1695 {173}	10.48	1906 {195}	9.85	2143 {219}	6.69	2646 {270}	1.50	2646 {270}
	30	10.87	1539 {157}	10.15	1713 {175}	9.35	1956 {200}	8.31	2074 {212}	5.42	2421 {247}	1.38	2646 {270}
	40	8.36	1525 {156}	7.83	1698 {173}	7.03	1883 {192}	6.74	2144 {219}	4.69	2646 {270}	1.12	2646 {270}
	50	6.62	1474 {151}	6.21	1642 {168}	5.68	1849 {189}	5.38	2077 {212}	3.89	2646 {270}	0.93	2646 {270}
	60	5.43	1402 {143}	5.11	1561 {159}	4.69	1758 {179}	4.45	1974 {201}	3.31	2563 {262}	0.82	2586 {264}

When running a speed within the shaded boxes , and also continuously for more than two hours, refer to the thermal rating factor on page 17 to factor this into your selection.

Dimensional Drawings EWMR150T/EWMR150V

See previous page for reducers without motors

EWMR150T

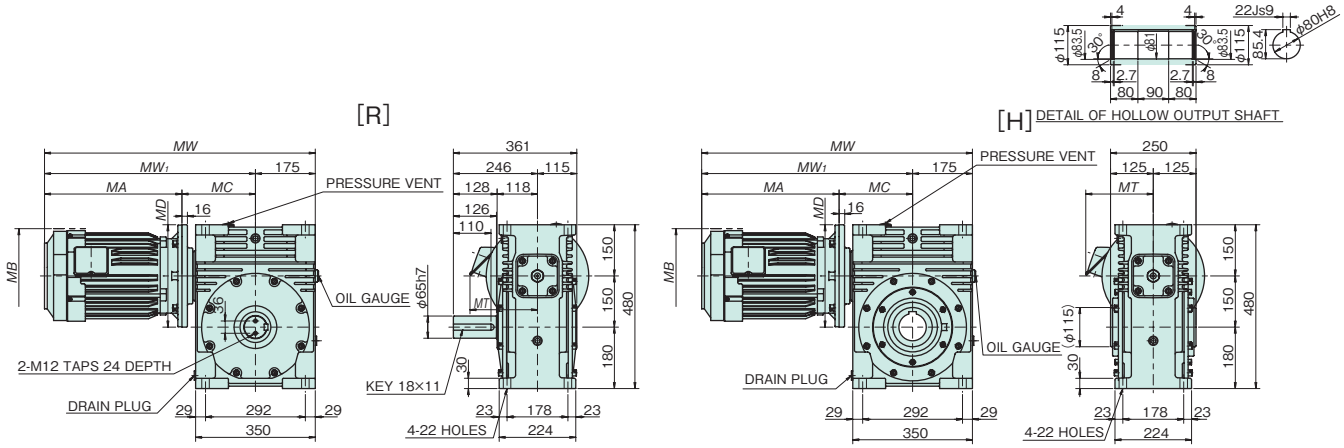

EWMR150V

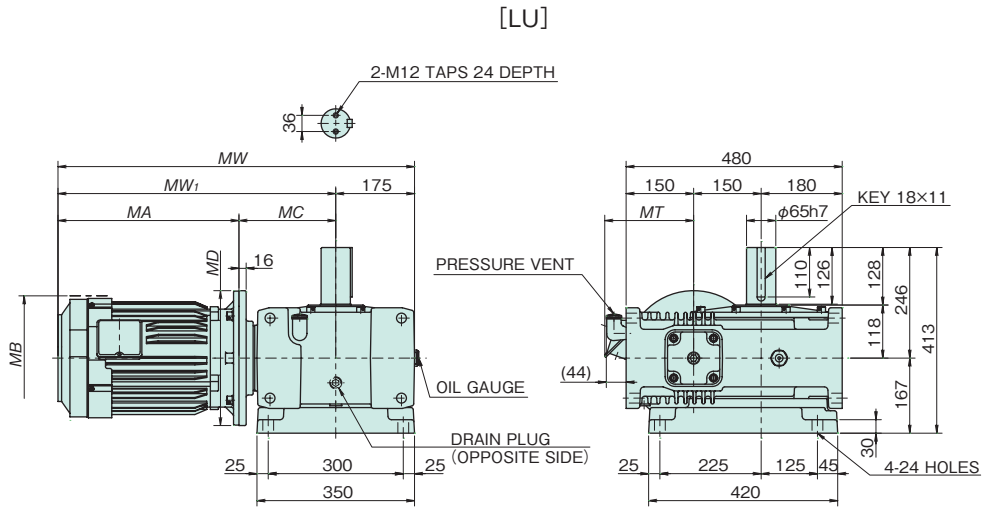

Transfer Capacity Table

* Refer to page 24 for shaft arrangements and relative direction of rotation.

Size	Standard combination		1750 r/min	1450 r/min	Values in ( ) for the motor indicates dimensions for a motor with a brake.								
	Motor kW	Reduction ratio	Output torque N·m {kgf·m}	Output torque N·m {kgf·m}	MA	MC	MW_1	MW	MB	MD	MT	T type Estimated mass kg	V type Estimated mass kg
EWMR150	5.5	40	1003 {102}	1193 {122}	402 (475)	215 (215)	617 (690)	792 (865)	277 (275)	300 (300)	197 (200.0)	195 (207)	215 (227)
		50	1225 {125}	1453 {148}									
		60	1402 {143}	1561 {159}									

* Motor/reducer combinations shown are standard.
* Shaded boxes indicate the motor capacity exceeds the input kW of the reducer. Confirm output torque before using.
* Refer to page 17 for sizing. * Thermal rating factor is 1.0.

Dimensional Drawings SWMR150T/SWMR150B/SWMR150V

SWMR150T

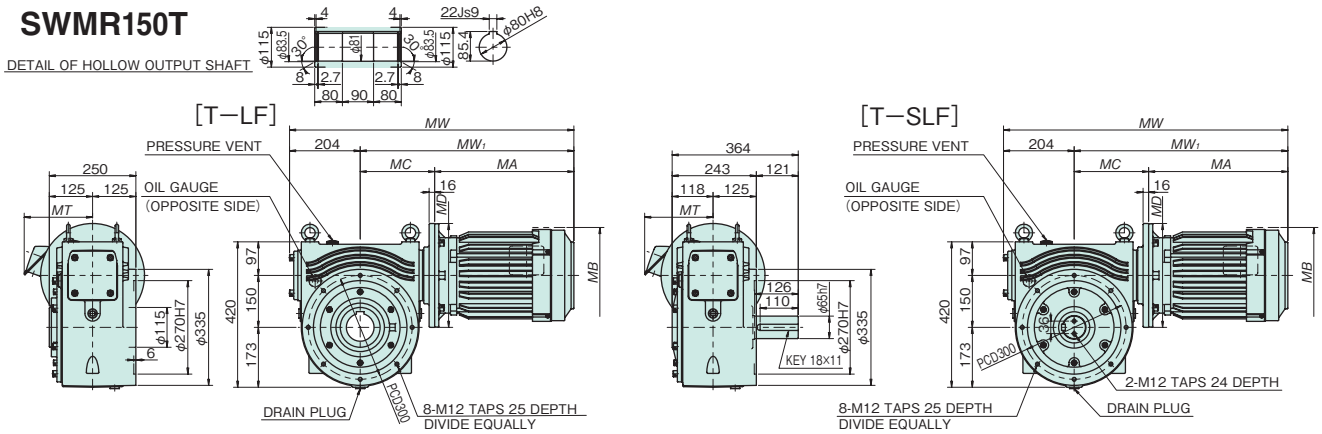

SWMR150B

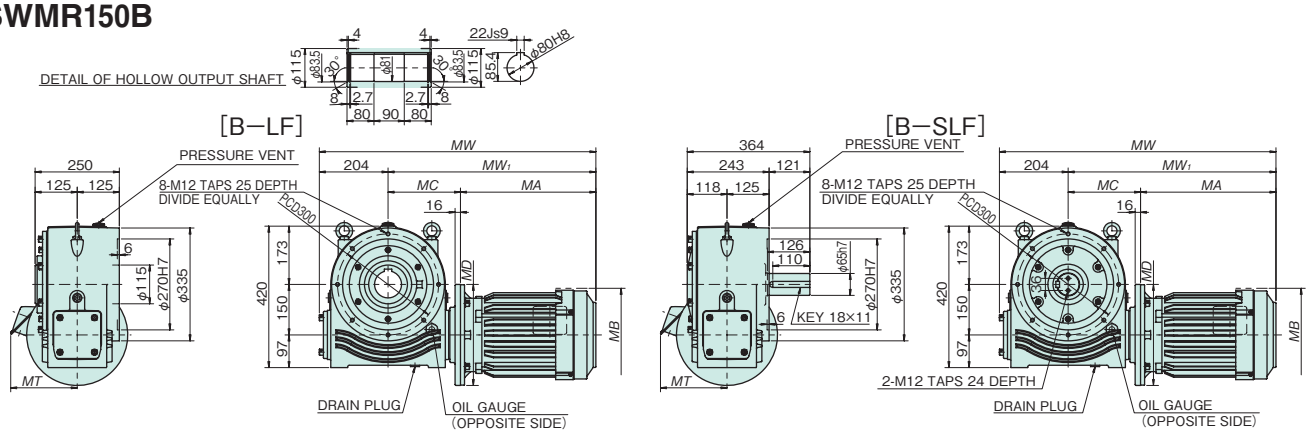

SWMR150V

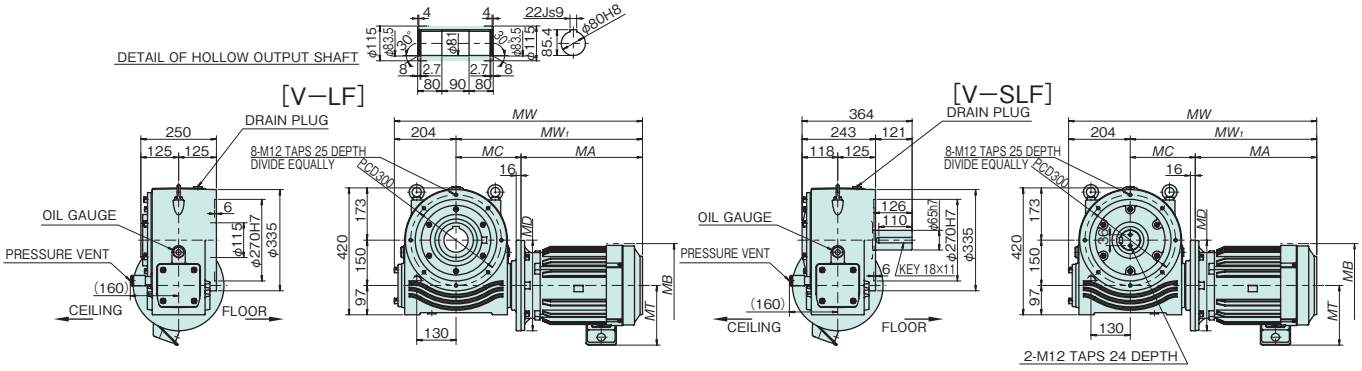

* Refer to page 24 for shaft arrangements and relative direction of rotation.

Transfer Capacity Table

Size	Standard combination		1750 r/min	1450 r/min	Values in ( ) for the motor indicates dimensions for a motor with a brake.							
	Motor kW	Reduction ratio	Output torque N·m {kgf·m}	Output torque N·m {kgf·m}	MA	MC	MW1	MW	MB	MD	MT	Estimated mass kg
SWMR150	5.5	40	1003 {102}	1193 {122}	402 (475)	215 (215)	617 (690)	821 (894)	277 (275)	300 (300)	197 (200.0)	175 (187)
		50	1225 {125}	1453 {148}								
		60	1402 {143}	1561 {159}								

* Motor/reducer combinations shown are standard.
* Shaded boxes indicate the motor capacity exceeds the input kW of the reducer. Confirm output torque before using.
* Refer to page 17 for sizing. * Thermal rating factor is 1.0.

Dimensional Drawings EW175T/EW175B/EW175V

EW175T

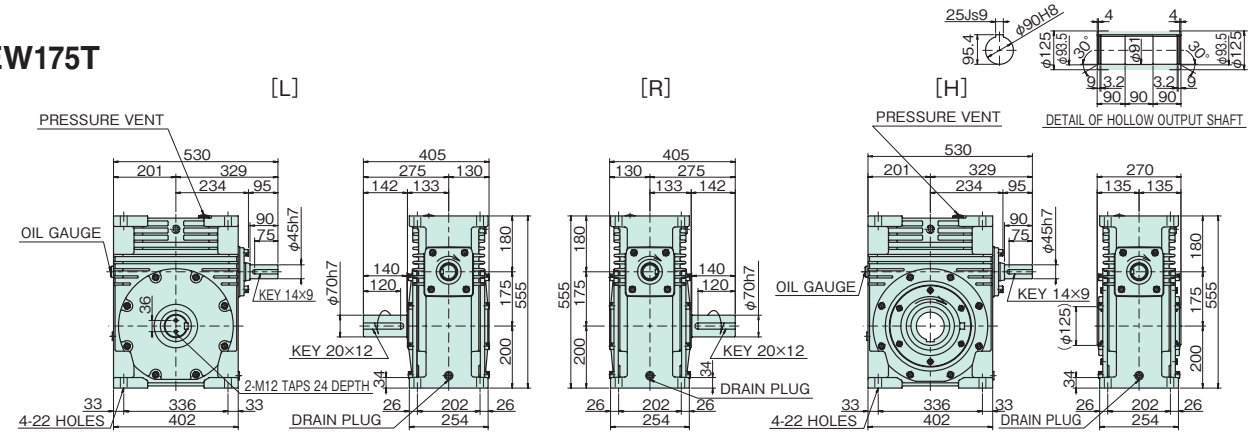

Estimated mass 184 kg

EW175B

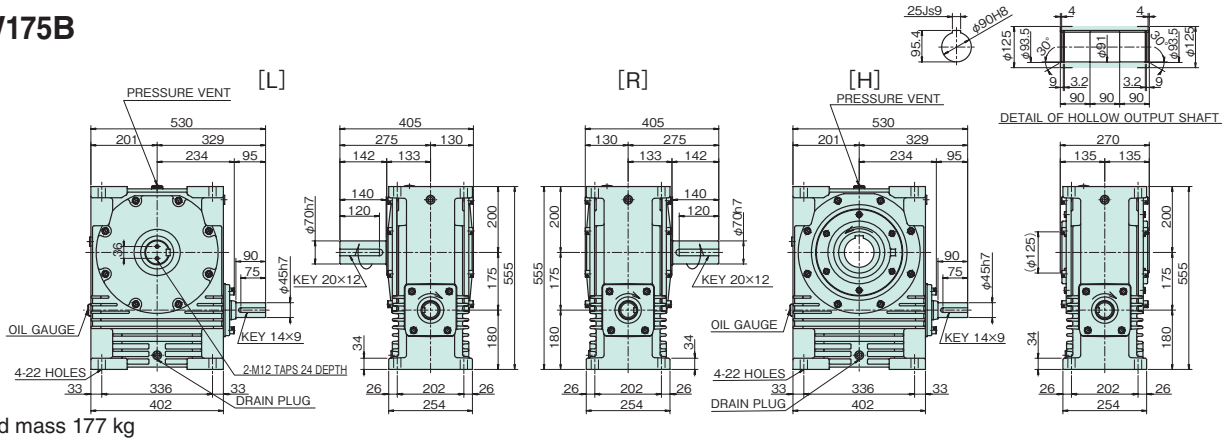

Estimated mass 177 kg

EW175V

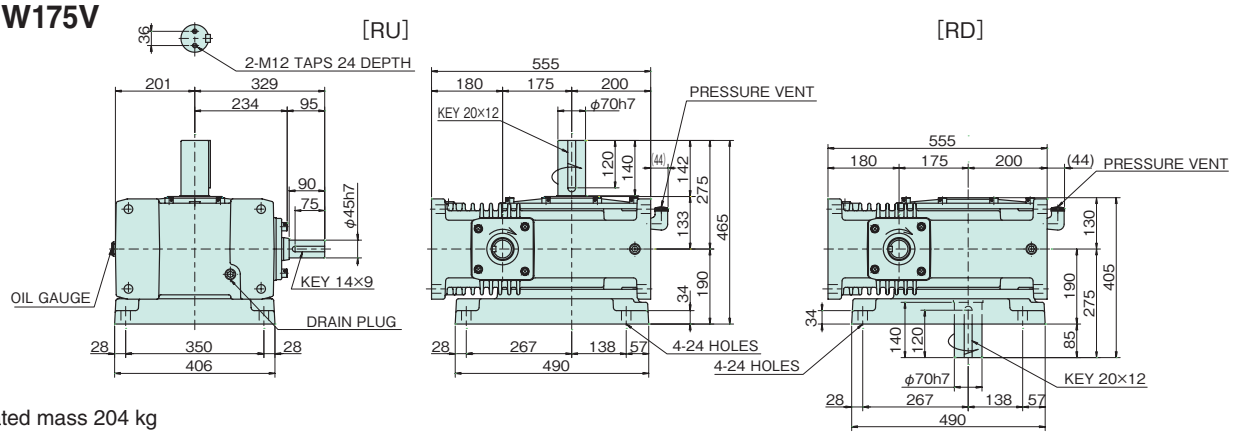

Estimated mass 204 kg

* Refer to page 24 for shaft arrangements and relative direction of rotation.

Transfer Capacity Table

Size	Input / Reduction ratio	1750 r/min Input kW	1750 r/min Output torque N·m {kgf·m}	1450 r/min Input kW	1450 r/min Output torque N·m {kgf·m}	1150 r/min Input kW	1150 r/min Output torque N·m {kgf·m}	950 r/min Input kW	950 r/min Output torque N·m {kgf·m}	500 r/min Input kW	500 r/min Output torque N·m {kgf·m}	100 r/min Input kW	100 r/min Output torque N·m {kgf·m}
EW175	10	37.09	1921 {196}	34.37	2139 {218}	30.78	2400 {245}	27.07	2539 {259}	17.86	3110 {317}	4.19	3395 {347}
	15	27.43	2088 {213}	25.06	2288 {234}	21.87	2496 {255}	19.27	2641 {270}	12.78	3223 {329}	2.96	3396 {347}
	20	21.44	2140 {218}	19.82	2370 {242}	17.27	2575 {263}	15.24	2725 {278}	10.15	3318 {339}	2.31	3396 {347}
	25	16.85	2068 {211}	15.68	2302 {235}	14.36	2625 {268}	12.70	2777 {283}	8.50	3378 {345}	1.93	3395 {347}
	30	15.16	2170 {221}	13.46	2300 {235}	11.63	2467 {252}	10.23	2589 {264}	6.66	3031 {309}	1.74	3396 {347}
	40	11.62	2149 {219}	10.87	2393 {244}	9.70	2640 {269}	8.62	2794 {285}	5.89	3390 {346}	1.40	3396 {347}
	50	8.93	2001 {204}	8.37	2228 {227}	7.75	2544 {260}	7.18	2795 {285}	4.95	3396 {347}	1.20	3396 {347}
	60	7.52	1973 {201}	7.06	2197 {224}	6.35	2428 {248}	6.12	2773 {283}	4.28	3396 {347}	1.05	3396 {347}

When running a speed within the shaded boxes , and also continuously for more than two hours, refer to the thermal rating factor on page 17 to factor this into your selection.

Dimensional Drawings SW175T/SW175B/SW175V

SW175T

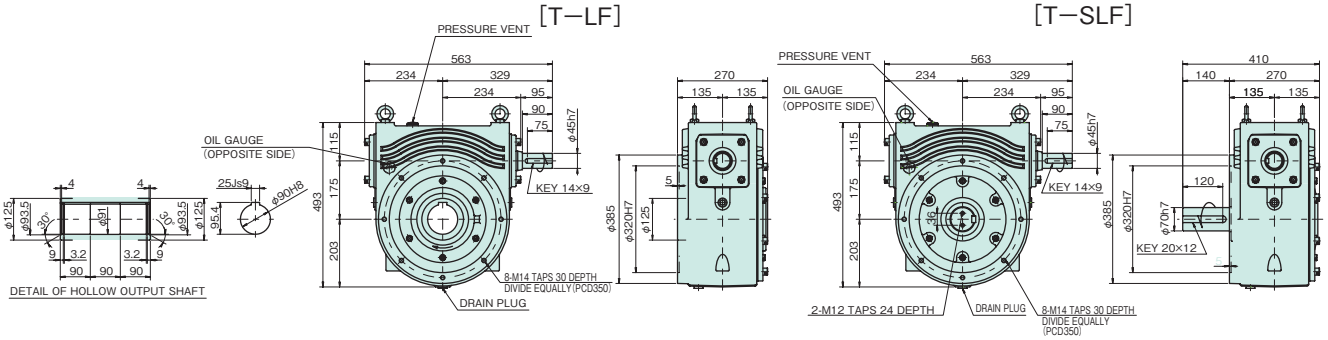

Estimated mass 168 kg

SW175B

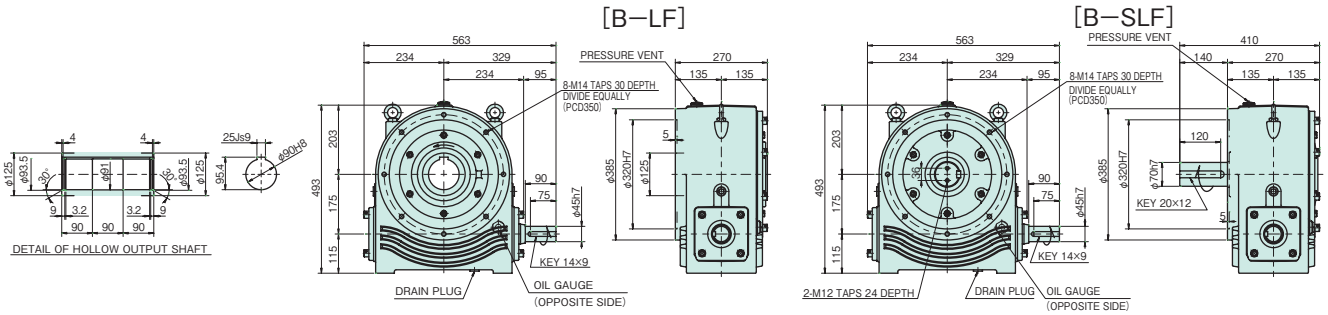

Estimated mass 168 kg

SW175V

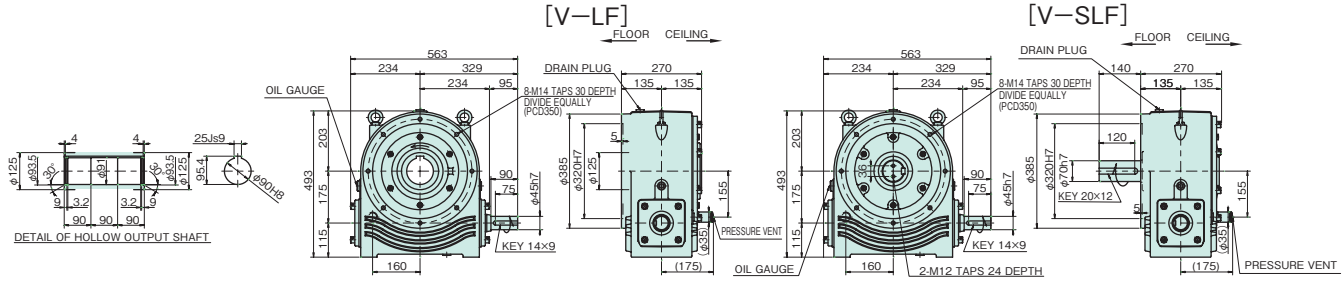

Estimated mass 168 kg

* Refer to page 24 for shaft arrangements and relative direction of rotation.

Transfer Capacity Table

Size	Input	1750 r/min		1450 r/min		1150 r/min		950 r/min		500 r/min		100 r/min	
	Reduction ratio	Input kW	Output torque N·m {kgf·m}	Input kW	Output torque N·m {kgf·m}	Input kW	Output torque N·m {kgf·m}	Input kW	Output torque N·m {kgf·m}	Input kW	Output torque N·m {kgf·m}	Input kW	Output torque N·m {kgf·m}
SW175	10	37.09	1921 {196}	34.37	2139 {218}	30.78	2400 {245}	27.07	2539 {259}	17.86	3110 {317}	4.19	3395 {347}
	15	27.43	2088 {213}	25.06	2288 {234}	21.87	2496 {255}	19.27	2641 {270}	12.78	3223 {329}	2.96	3396 {347}
	20	21.44	2140 {218}	19.82	2370 {242}	17.27	2575 {263}	15.24	2725 {278}	10.15	3318 {339}	2.31	3396 {347}
	25	16.85	2068 {211}	15.68	2302 {235}	14.36	2625 {268}	12.70	2777 {283}	8.50	3378 {345}	1.93	3395 {347}
	30	15.16	2170 {221}	13.46	2300 {235}	11.63	2467 {252}	10.23	2589 {264}	6.66	3031 {309}	1.74	3396 {347}
	40	11.62	2149 {219}	10.87	2393 {244}	9.70	2640 {269}	8.62	2794 {285}	5.89	3390 {346}	1.40	3396 {347}
	50	8.93	2001 {204}	8.37	2228 {227}	7.75	2544 {260}	7.18	2795 {285}	4.95	3396 {347}	1.20	3396 {347}
	60	7.52	1973 {201}	7.06	2197 {224}	6.35	2428 {248}	6.12	2773 {283}	4.28	3396 {347}	1.05	3396 {347}

When running a speed within the shaded boxes , and also continuously for more than two hours, refer to the thermal rating factor on page 17 to factor this into your selection.

Dimensional Drawings EW200T/EW200B/EW200V

EW200T

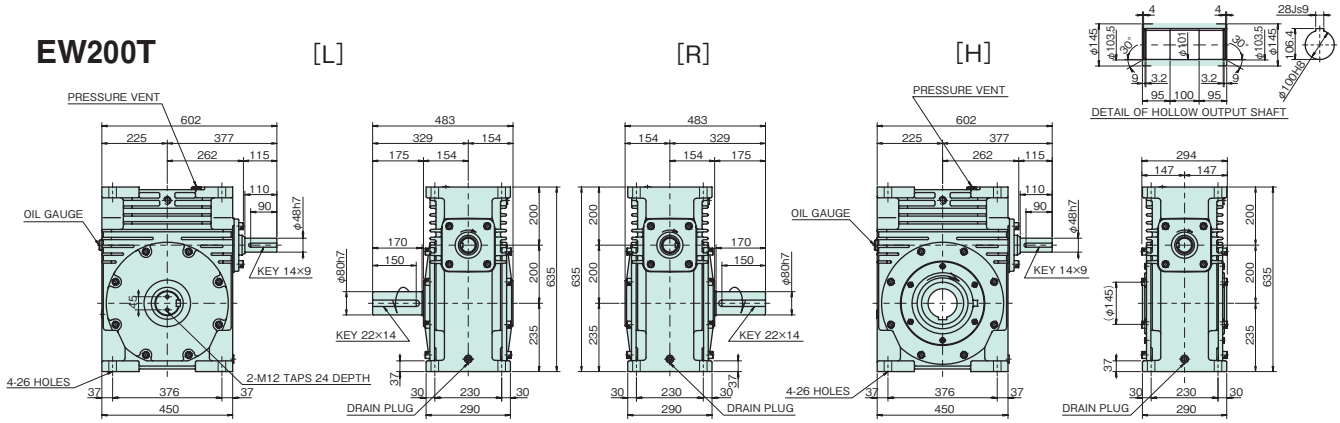

Estimated mass 314 kg

EW200B

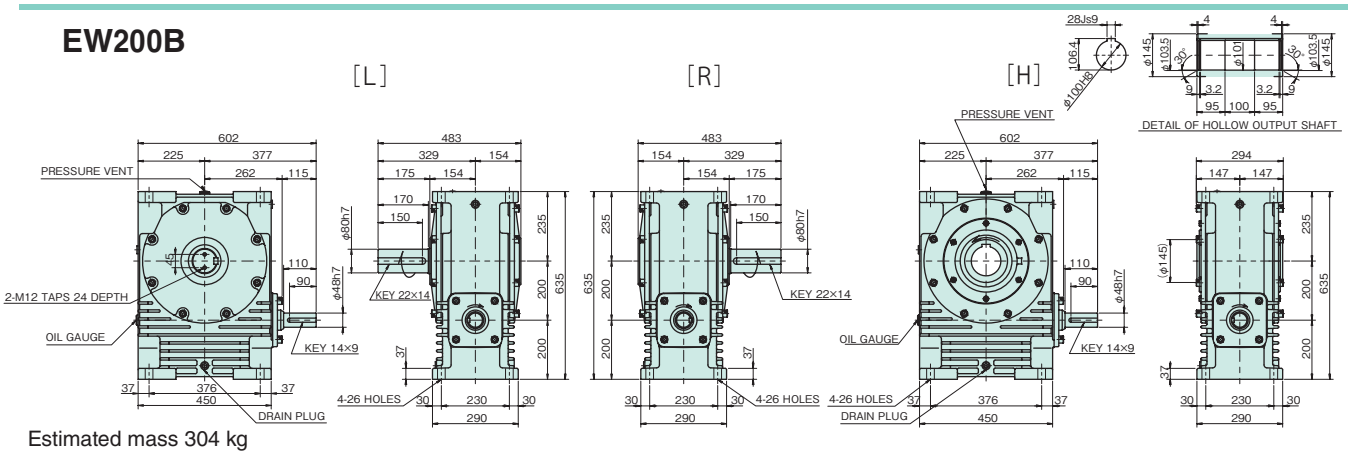

Estimated mass 304 kg

EW200V

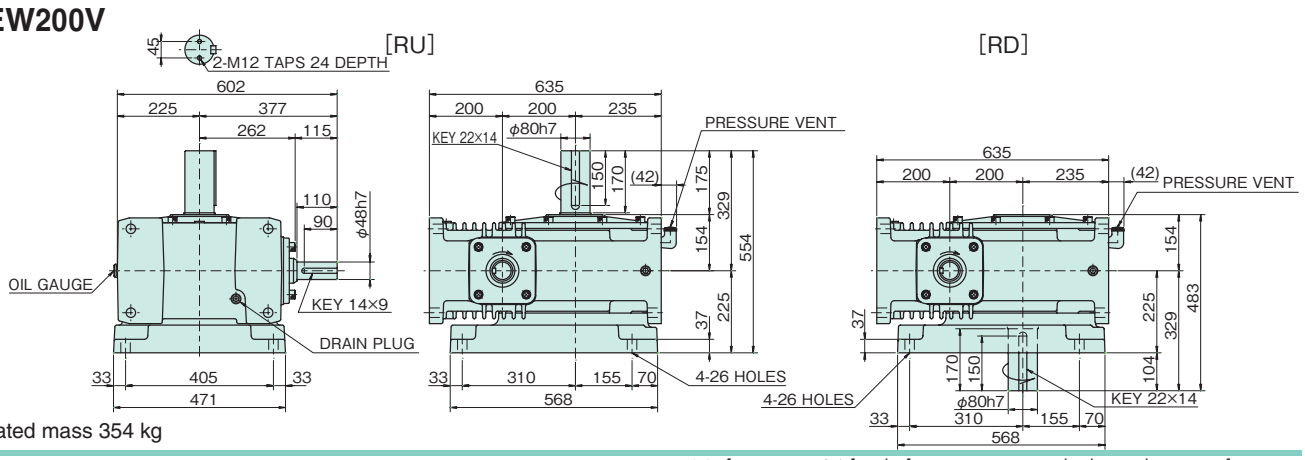

Estimated mass 354 kg

* Refer to page 24 for shaft arrangements and relative direction of rotation.

Transfer Capacity Table

Size	Input / Reduction ratio	1750 r/min Input kW	1750 r/min Output torque N·m {kgf·m}	1450 r/min Input kW	1450 r/min Output torque N·m {kgf·m}	1150 r/min Input kW	1150 r/min Output torque N·m {kgf·m}	950 r/min Input kW	950 r/min Output torque N·m {kgf·m}	500 r/min Input kW	500 r/min Output torque N·m {kgf·m}	100 r/min Input kW	100 r/min Output torque N·m {kgf·m}
EW200	10	50.13	2597 {265}	46.43	2892 {295}	42.28	3301 {337}	39.17	3682 {376}	26.44	4613 {471}	7.05	5704 {582}
	15	36.95	2813 {287}	34.28	3132 {320}	31.29	3576 {365}	28.46	3907 {399}	18.91	4776 {487}	4.99	5703 {582}
	20	28.93	2888 {295}	26.88	3216 {328}	24.59	3671 {375}	22.49	4025 {411}	15.01	4910 {501}	3.92	5704 {582}
	25	22.86	2804 {286}	21.27	3122 {319}	19.49	3564 {364}	18.16	3975 {406}	12.56	4992 {509}	3.27	5704 {582}
	30	20.38	2916 {298}	19.00	3247 {331}	17.29	3671 {375}	15.21	3855 {393}	9.94	4526 {462}	2.95	5704 {582}
	40	15.67	2894 {295}	14.65	3223 {329}	13.51	3680 {376}	12.66	4105 {419}	8.71	5018 {512}	2.39	5703 {582}
	50	12.11	2709 {276}	11.35	3017 {308}	10.50	3444 {352}	9.87	3842 {392}	7.41	5073 {518}	2.06	5703 {582}
	60	10.15	2646 {270}	9.53	2947 {301}	8.85	3365 {343}	8.34	3754 {383}	6.55	5137 {524}	1.83	5703 {582}

When running a speed within the shaded boxes , and also continuously for more than two hours, refer to the thermal rating factor on page 17 to factor this into your selection.

Dimensional Drawings SW200T/SW200B/SW200V

SW200T

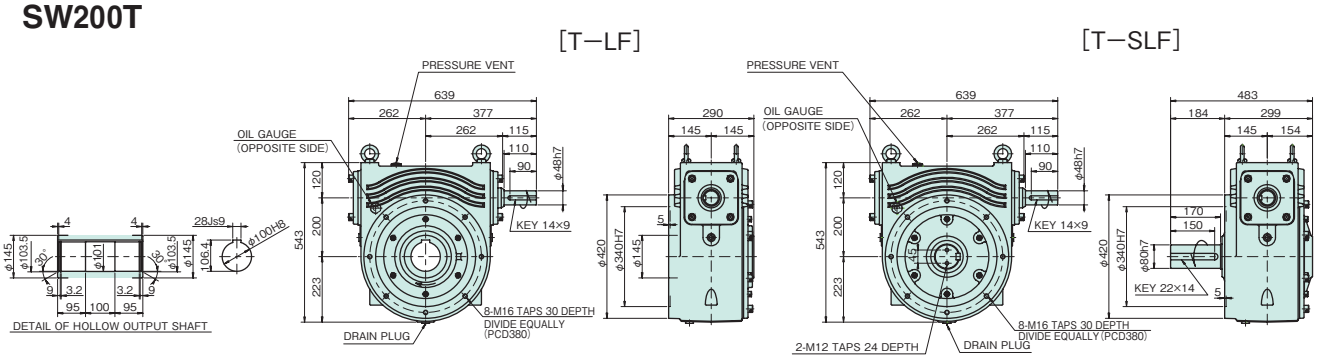

Estimated mass 234 kg

SW200B

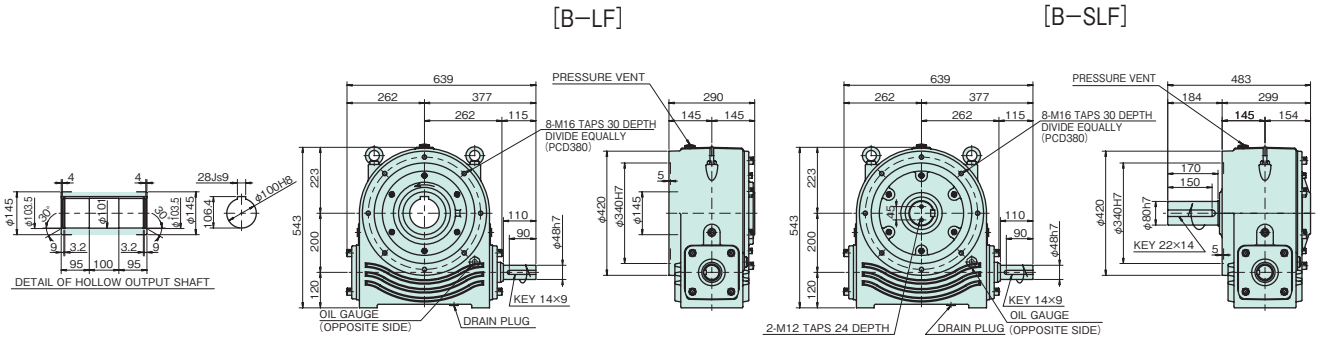

Estimated mass 234 kg

SW200V

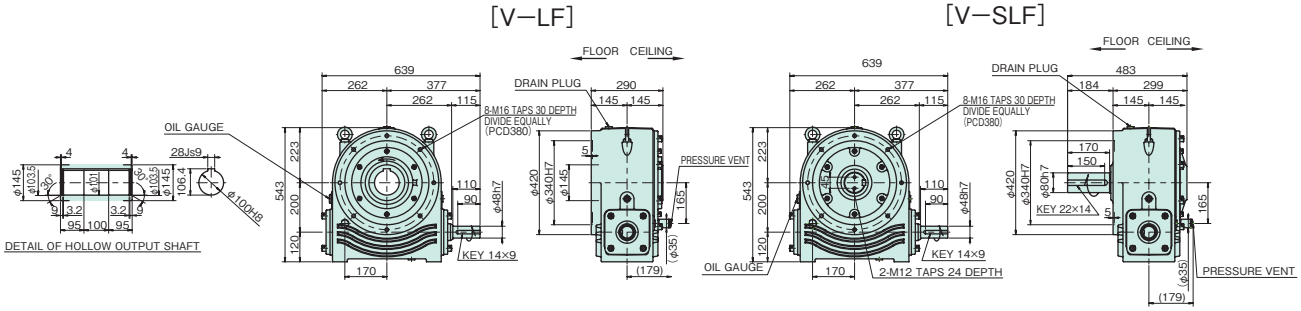

Estimated mass 234 kg

* Refer to page 24 for shaft arrangements and relative direction of rotation.

Transfer Capacity Table

Size	Input	1750 r/min		1450 r/min		1150 r/min		950 r/min		500 r/min		100 r/min	
	Reduction ratio	Input kW	Output torque N·m {kgf·m}	Input kW	Output torque N·m {kgf·m}	Input kW	Output torque N·m {kgf·m}	Input kW	Output torque N·m {kgf·m}	Input kW	Output torque N·m {kgf·m}	Input kW	Output torque N·m {kgf·m}
SW200	10	50.13	2597 {265}	46.43	2892 {295}	42.28	3301 {337}	39.17	3682 {376}	26.44	4613 {471}	7.05	5704 {582}
	15	36.95	2813 {287}	34.28	3132 {320}	31.29	3576 {365}	28.46	3907 {399}	18.91	4776 {487}	4.99	5703 {582}
	20	28.93	2888 {295}	26.88	3216 {328}	24.59	3671 {375}	22.49	4025 {411}	15.01	4910 {501}	3.92	5704 {582}
	25	22.86	2804 {286}	21.27	3122 {319}	19.49	3564 {364}	18.16	3975 {406}	12.56	4992 {509}	3.27	5704 {582}
	30	20.38	2916 {298}	19.00	3247 {331}	17.29	3671 {375}	15.21	3855 {393}	9.94	4526 {462}	2.95	5704 {582}
	40	15.67	2894 {295}	14.65	3223 {329}	13.51	3680 {376}	12.66	4105 {419}	8.71	5018 {512}	2.39	5703 {582}
	50	12.11	2709 {276}	11.35	3017 {308}	10.50	3444 {352}	9.87	3842 {392}	7.41	5073 {518}	2.06	5703 {582}
	60	10.15	2646 {270}	9.53	2947 {301}	8.85	3365 {343}	8.34	3754 {383}	6.55	5137 {524}	1.83	5703 {582}

When running a speed within the shaded boxes , and also continuously for more than two hours, refer to the thermal rating factor on page 17 to factor this into your selection.

Innovation in Motion

TSUBAKI

PT. MASA JAYA PERKASA

info@masajayaperkasa.com

Jl. Hayam Wuruk No. 76,
Jakarta Barat,DKI Jakarta 11160

(+62)21-649-6496

(+62)852-1116-7713